International Technical Support Organization

GG24-4389-00

IBM AS/400 Printing IV

January 1995

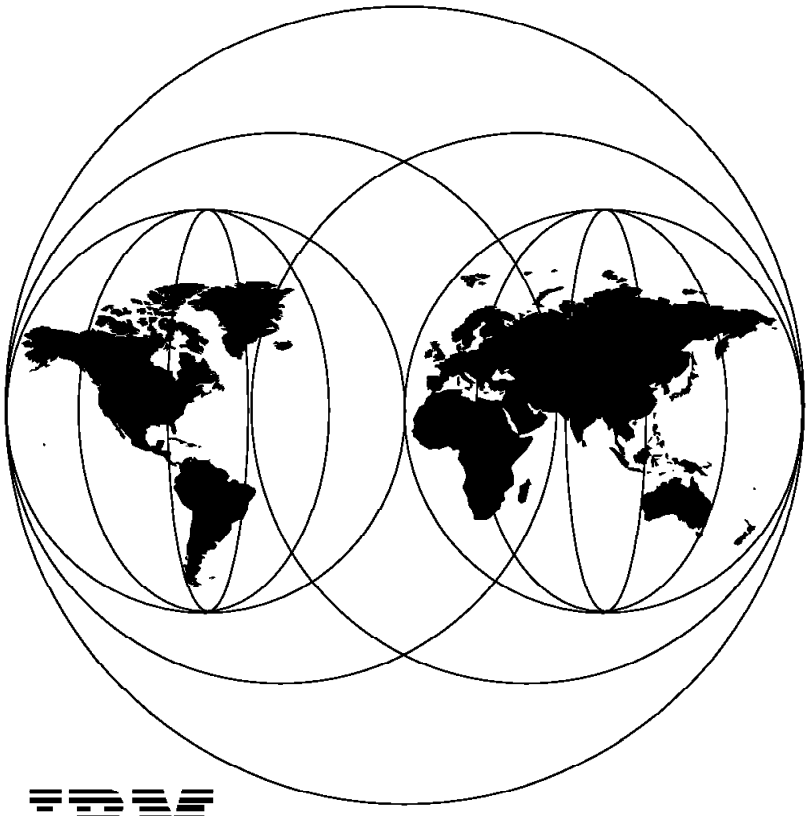

IBM

International Technical Support Organization
Rochester Center

International Technical Support Organization

GG24-4389-00

IBM AS/400 Printing IV

January 1995

Take Note!

Before using this information and the product it supports, be sure to read the general information under "Special Notices" on page xvii.

First Edition (January 1995)

This edition applies to the IBM programs and versions listed below:

- IBM Operating System/400 Version 3.0 Release 1.0, 5763-SS1
- Client Access/400, 5763-XA1
- OfficeVision/400, 5763-WP1
- LAN Resource Extension and Services, 5733-CSA

Order publications through your IBM representative or the IBM branch office serving your locality. Publications are not stocked at the address given below.

An ITSO Technical Bulletin Evaluation Form for reader's feedback appears facing Chapter 1. If the form has been removed, comments may be addressed to:

IBM Corporation, International Technical Support Organization
Dept. 977 Building 663-3
3605 Highway 52N
Rochester, Minnesota 55901-7829

Abstract

This document describes the new printing functions available in Version 3.0 Release 1.0 for the AS/400. It provides explanations of how you might want to use the new functions with diagrams, programming samples and working examples.

This document is intended for customers, business partners and IBM systems specialists who need to understand the fundamentals of printing on the AS/400 to help them develop or advise others concerning the design and development of AS/400 printing applications.

This document is not intended to replace the existing AS/400 printing publications, but rather to expand on the new functions of printing in Version 3.0 Release 1.0.

(294 pages)

Contents

Abstract . . . iii

Special Notices . . . xvii

Preface . . . xix
How This Document is Organized . . . xix
Related Publications . . . xx
International Technical Support Organization Publications . . . xxi
Acknowledgments . . . xxiv

Chapter 1. ASCII LAN-Attached Printers . . . 1
1.1 How ASCII LAN-Attached Printing Works . . . 1
1.2 Benefits of Using ASCII LAN-Attached Printers . . . 4
1.3 ASCII Printers Attached via the IBM 4033 . . . 5
1.3.1 Configuration . . . 5
1.3.2 Sharing ASCII LAN-Attached Printers via IBM 4033 . . . 10
1.4 ASCII Printers Attached via the MarkNet XLe . . . 11
1.4.1 Configuration . . . 11
1.4.2 Sharing ASCII LAN-Attached Printers via MarkNet XLe . . . 16
1.5 ASCII Printers Attached via the Integrated Network Option . . . 17
1.5.1 Configuration . . . 17
1.5.2 Sharing ASCII LAN-Attached Printers via INO . . . 21
1.6 Error Recovery for ASCII LAN-Attached Printers . . . 22
1.6.1 Errors Involving the Communications Link . . . 22
1.6.2 Operator Intervention Errors . . . 23
1.7 Restrictions when Using ASCII LAN-Attached Printers . . . 23
1.8 Printing to ASCII Printers via TCP/IP . . . 24
1.8.1 Acquiring INO and MarkNet XLe Flash Microcode . . . 24
1.8.2 Configuring TCP/IP . . . 25
1.8.3 Printing via TCP/IP . . . 26

Chapter 2. Remote System Printing . . . 31
2.1 Introduction to Remote System Printing . . . 31
2.2 New and Changed CL Commands for Remote System Printing . . . 33
2.3 Configurations . . . 34
2.4 V3R1 OS/400 to V3R1 OS/400 . . . 36
2.4.1 Setup . . . 37
2.4.2 Using the CRTOUTQ Command to Send to V3R1 OS/400 . . . 39
2.4.3 Starting a Remote Printer Writer . . . 42
2.4.4 Examples . . . 42
2.4.5 Operation and Usage . . . 46
2.4.6 Spooled File Status . . . 46
2.5 V3R1 OS/400 to V2 OS/400 . . . 48
2.5.1 Setup . . . 48
2.5.2 Using the CRTOUTQ Command to Send to OS/400 V2 . . . 50
2.5.3 Starting a Remote Printer Writer . . . 52
2.5.4 Examples . . . 53
2.5.5 Operation and Usage . . . 55
2.5.6 Spooled File Status . . . 56
2.6 V3R1 OS/400 to System/390 . . . 57
2.6.1 Setup . . . 57

2.6.2 Using the CRTOUTQ Command to Send to System/390 58
2.6.3 Starting a Remote Writer 60
2.6.4 Examples 60
2.6.5 Operation and Usage 61
2.6.6 Spooled File Status 62
2.7 V3R1 OS/400 to PSF/2 64
2.7.1 Setup 65
2.7.2 Using the CRTOUTQ Command to Send to PSF/2 65
2.7.3 Starting a Remote Printer Writer 67
2.7.4 Examples 67
2.7.5 Operation and Usage 68
2.7.6 Spooled File Status 69
2.8 V3R1 OS/400 to PSF/6000 70
2.8.1 Setup 71
2.8.2 Using the CRTOUTQ Command to Send to PSF/6000 71
2.8.3 Starting a Remote Printer Writer 73
2.8.4 Examples 73
2.8.5 Operation and Usage 75
2.8.6 Spooled File Status 76
2.8.7 User Print Information 77
2.9 Using the VM/MVS Bridge Outbound Exit Point with Remote Printing . . 78
2.9.1 NJE Header and Trailer Records 79
2.9.2 The VM/MVS Bridge and the NJE Outbound Exit Point 79
2.9.3 Exit Program Registration 82
2.9.4 Example of a User Exit Program to Modify NJE Accounting Information 83
2.10 Hints and Tips/Troubleshooting 85
2.10.1 General Troubleshooting Hints 85
2.10.2 CPI8078 - Distribution of Spooled File Failed 85
2.10.3 CPF3395 - File Held by Writer 86
2.10.4 Messages not Returned for SNA 87
2.10.5 *PASTHR and Double Display Station Pass-through 87
2.10.6 *PASTHR and System Name Resolution 87
2.10.7 Failures with Heavy Use of TCP/IP 87
2.10.8 Remote Printing from OfficeVision/400 88
2.11 Additional Documentation 88

Chapter 3. Printer Load Balancing 89
3.1 Multiple Printer Writers 89
3.1.1 Restrictions when Using Multiple Writers 92
3.2 Restricting the Size of Printed Output 94
3.2.1 Restrictions when Limiting the Size of Printed Output 96

Chapter 4. Version 3.0 Release 1.0 Printer File and DDS Enhancements . . . 99
4.1 Printer File Changes in V3R1 99
4.1.1 OUTBIN 99
4.1.2 REDUCE 99
4.1.3 DRAWER 100
4.1.4 MULTIUP 101
4.2 DDS Changes in V3R1 101
4.2.1 OVERLAY DDS Keyword 101
4.2.2 PAGSEG DDS Keyword 102
4.2.3 GDF DDS Keyword 102
4.2.4 DRAWER DDS Keyword 102

Chapter 5. AS/400 Printing Enhancements 103
5.1 First/Following Pages Overlay Enhancement 103
5.2 Displaying AFPDS Spooled Files 104
5.3 Disabling Printer Resident Fonts Support 105
5.3.1 Code Page Considerations 106
5.3.2 How Font Substitution Works 107
5.3.3 OfficeVision/400 and Font Substitution 108
5.3.4 Disabling Resident Fonts Support Implementation 109
5.4 270 Degree Rotation with *AUTO or *COR 110
5.5 QPRTVALS Data Area 111
5.5.1 IBM 4028 and its Logical Page Origin 112
5.5.2 IBM 4028, 3835, and 3831 with 90 Degree Rotation 113
5.5.3 IBM 3835-002 and its Logical Page Origin 114
5.5.4 Front/Back Margins and Positioning of Overlays 115
5.5.5 3/4″ Top Margin for *COR 117
5.6 IBM 3912 and 3916 Print Output Presentation 118
5.6.1 IPDS Menu Settings (Model AS1) 118
5.6.2 Setting Examples 122
5.6.3 IBM 3912 and 3916 XPA/PC RPQ Enhancements 128
5.7 IBM 3912/3916/4028 Font Enhancements 130
5.8 Work with AFP (WRKAFP) Command 131

Chapter 6. Advanced Host Print Transform Customization 137
6.1 Host Print Transform Functional Overview 137
6.1.1 Host Print Transform V3R1 Enhancements 139
6.2 Host Print Transform Supported Printers 141
6.3 Customizing ASCII Printers that Use the Host Print Transform 145
6.3.1 Preparing for Customization 146
6.3.2 Retrieving the Workstation Customizing Source 146
6.3.3 Editing the WSCST Source Object 147
6.3.4 Understanding the Transform Table 149
6.3.5 Creating the Workstation Customizing Object 166
6.3.6 Specifying the Workstation Customizing Object 167
6.4 Customizing WSCST Hints and Tips 168
6.4.1 Customizing Fonts 168
6.4.2 Customizing the Top Margin 170
6.5 PCL5 Language Overview 171

Chapter 7. Print Services Facility/400 (PSF/400) 175
7.1 OS/400 Print Subsystems Background 175
7.2 PSF/400 Overview 176
7.3 When Do You Need PSF/400? 178
7.3.1 When PSF/400 is Required 178
7.3.2 When PSF/400 is Optional 178
7.3.3 PRTF Parameters and DDS Keywords that Require PSF/400 179
7.4 PSF/400 and PSF/2 Distributed Print Function 180
7.5 PSF/400 Feature Options 181

Chapter 8. AS/400 Advanced Function Printers 183
8.1 AS/400 IPDS Laser Printers 183
8.1.1 IBM 4028-AS1 183
8.1.2 IBM 3812-002 184
8.1.3 IBM 3912 184
8.1.4 IBM 3816 185
8.1.5 IBM 3916 186

8.1.6 IBM 3820 . . . 186
8.1.7 IBM 3930 . . . 187
8.1.8 IBM 3935 . . . 187
8.1.9 IBM 3825 . . . 188
8.1.10 IBM 3827 . . . 188
8.1.11 IBM 3828 MICR . . . 189
8.1.12 IBM 3829 . . . 189
8.1.13 IBM 3835 . . . 189
8.1.14 IBM 3900 . . . 190
8.1.15 IPDS Laser Printer Features . . . 192
8.1.16 IPDS Laser Printers and Their Functions . . . 193
8.2 AS/400 IPDS Impact Printers . . . 195
8.2.1 IBM 4224 . . . 196
8.2.2 IBM 4230 . . . 196
8.2.3 IBM 4234 . . . 197
8.2.4 IBM 6408 . . . 197
8.2.5 IBM 6412 . . . 197
8.2.6 AS/400 IPDS Impact Printers and Their Functions . . . 198
8.3 Advanced Function Printing Resources . . . 199
8.3.1 Form Definition . . . 200
8.3.2 Overlay . . . 201
8.3.3 Page Segment . . . 202
8.3.4 Page Definition . . . 202
8.3.5 Fonts . . . 203
8.4 Additional Documentation . . . 204

Chapter 9. Double Byte Character Set Printing . . . 207
9.1 DBCS Environment . . . 208
9.1.1 DBCS Character Input . . . 209
9.1.2 DBCS Character Output . . . 209
9.2 AS/400 DBCS Enabling . . . 210
9.3 DBCS Printing Process . . . 212
9.3.1 Printers Attached Directly to the Workstation Controller . . . 217
9.3.2 Printers Attached via a DBCS Enabled PC . . . 219
9.3.3 Network Printing . . . 227
9.3.4 AFP Printers with DBCS Support . . . 228
9.4 How to Print Double-Byte Characters . . . 231
9.4.1 Where You Can Use Double-Byte Characters . . . 231
9.4.2 How to Indicate Double-Byte Characters . . . 232
9.4.3 DBCS Unique Licensed Programs and Tools . . . 237
9.4.4 Special Considerations for DBCS Printing . . . 238

Chapter 10. LANRES/400 Printing . . . 241
10.1 LANRES/400 LAN-to-Host Print . . . 241
10.1.2 LAN-to-Host Print Commands . . . 242
10.1.3 LAN-to-Host Printing Example using EWXLINE . . . 243
10.1.4 Using the EWXSENDF Exit Program . . . 246
10.1.5 USERASCII LAN-to-Host Print (EWXLHASCII) . . . 248
10.1.6 AFPDS LAN-to-Host Printing . . . 249
10.2 LANRES/400 Host-to-LAN Print . . . 253
10.2.2 Host-to-LAN Print Commands . . . 256
10.2.3 Host-to-LAN Printing Example using EWXHSCS . . . 256

Appendix A. Advanced Function Printer Utilities/400 Enhancements in V3R1 261
A.1 Additional Support for New Printers . . . 261

A.2 Additional Functional Enhancements 262
A.3 Usability Enhancements 263

Appendix B. Enhancements to the AFP to ASCII Transform 265
B.1 The QWPZTAFP API 265
B.1.1 Limitations 266
B.2 The Transform AFP Spooled File to ASCII Spooled File Tool 267
B.2.1 Creating the Transform AFP Spooled File to ASCII Spooled File Tool 267
B.2.2 Using the Transform AFP Spooled File to ASCII Spooled File Tool 267
B.3 Additional Documentation 270

Appendix C. Using the AFP Viewer with AS/400 AFPDS Spooled Files . . . 271
C.1 CPYAFP Command 271
C.2 CPYAFP CL Program 273
C.3 CPYAFPTOF C Program 274
C.4 Commands to Create CPYAFP Command and Programs 283

Appendix D. PrintManager/400 and the PM400 Tool 285

List of Abbreviations 287

Index 289

Figures

1. Physical View of ASCII LAN-Attached Printers . . . 2
2. ASCII LAN-Attached Printers File Processing . . . 3
3. Change Line Description Token-Ring Display . . . 6
4. Create Device Description Printer Display . . . 7
5. Change Line Description Token-Ring Display . . . 12
6. Create Device Description Printer Display . . . 13
7. Change Line Description Token-Ring Display . . . 18
8. Create Device Description Printer Display . . . 19
9. Configuring MarkNet XLe via TELNET . . . 25
10. Configuring MarkNet XLe via TELNET . . . 26
11. Start TCP/IP File Transfer (FTP) . . . 27
12. Printing AS/400 Source File Member via FTP . . . 28
13. Printing AS/400 ASCII File via FTP . . . 29
14. Printing AS/400 Spooled Files via LPR . . . 30
15. Automated Printing of AS/400 Spooled Files via LPR . . . 30
16. Token-Ring Network Used when Writing this Chapter . . . 32
17. Overview of the Remote Printer Function . . . 33
18. Example of WRKDIR Screen on Source System at V3R1 . . . 38
19. Example of WRKDIR Screen on Target System at V3R1 . . . 39
20. Example of CRTOUTQ Screen for SNA Communications . . . 43
21. Example of CRTOUTQ Screen for TCP/IP Communications . . . 44
22. Example of CRTOUTQ Screen for SNA Communications . . . 45
23. Confirmation Messages Returned to SNADS Log on Source AS/400 . . . 47
24. Confirmation Messages Returned to SNADS Log on Target AS/400 . . . 47
25. Example of WRKDIR Screen on Target System at V2R3 (Option 1) . . . 50
26. Example of WRKDIR Screen on Target System at V2R3 (Option 2) . . . 50
27. Example of CRTOUTQ Screen for Sending to V2 OS/400 . . . 53
28. Example of Error Message Returned when Spooled File not Sent . . . 54
29. Example of CRTOUTQ Screen for Sending to V2 OS/400 . . . 55
30. Example of Confirmation Messages Returned to SNADS Log . . . 56
31. Example of CRTOUTQ Command for Sending to S/390 System . . . 60
32. Example of CRTOUTQ Command for Sending to S/390 System . . . 61
33. Example of Messages Returned to SNADS Log when Sending to VM . . . 63
34. Example of SNADS Log for an Unsuccessful Transmission . . . 63
35. Example of QNETSPLF Message Queue for an Unsuccessful Transmission . . . 64
36. Example of CRTOUTQ Command for Sending to PSF/2 . . . 68
37. Example of CRTOUTQ Command for Sending to PSF/6000 . . . 74
38. Example of CRTOUTQ Command for Sending to PSF/6000 . . . 75
39. Example of CHGUSRPRTI Screen . . . 78
40. Elements of the VM/MVS Bridge . . . 80
41. Example of ADDEXITPGM Screen . . . 82
42. *PASTHR and Double Display Station Pass-through . . . 87
43. Two Printer Writers Started to One Output Queue . . . 90
44. Starting Two Writers with Different Form Types . . . 92
45. Using the MAXPAGES Parameter to Control Printing . . . 95
46. Spooled File Status Values . . . 96
47. OVERLAY Keyword with Program-to-System Fields . . . 101
48. PAGSEG Keyword with Program-to-System Fields . . . 102
49. GDF Keyword with Program-to-System Fields . . . 102
50. First and Following Pages Overlay Example . . . 104

51. Display Spooled File Screen 105
52. Disabling Resident Printer Fonts Example 106
53. Rotation 270 Degrees with *AUTO or *COR Example 111
54. Display Data Area QPRTVALS Screen 112
55. IBM 4028 and its Logical Page Origin 113
56. IBM 4028, 3835, and 3831 with 90 Degree Rotation 114
57. IBM 3835-002 and its Logical Page Origin 115
58. Front and Back Margins and Overlay Position 116
59. 3/4 Inch Top Margin for *COR 117
60. Page 1 of Settings - Host Settings 119
61. Page 2 of Settings - IPDS Settings 119
62. IBM 3912 and 3916 Printable Areas or Whole Page Formats 122
63. Example 1: AFP(*NO) and 3912/3916 Printable Area 123
64. Example 2: AFP(*NO) and Printable Area same as IBM 4028 123
65. Example 3: AFP(*NO) and Whole Page 124
66. Example 4: AFP(*YES) and 3912/3916 Printable Area 124
67. Example 5: AFP(*YES) and Printable Area same as IBM 4028 125
68. Example 6: AFP(*YES), Whole Page, without QPRTVALS Data Area . . 125
69. Example 7: AFP(*YES), Whole Page, with QPRTVALS Data Area 126
70. Example 8: AFP(*YES), 3912/3916 Printable Area with QPRTVALS Data Area 127
71. Example 9: AFP(*NO) with 90 Degree Rotation 127
72. Example 10: AFP(*YES) with 90 Degree Rotation 128
73. Work with AFP Command Screen 132
74. Host Print Transform Functional Process 138
75. How the Host Print Transform Function Works 141
76. Retrieve WSCST Source Screen 147
77. Start Source Entry Utility Screen 148
78. Work with Members Using SEU Screen 148
79. SEU Edit Screen 149
80. NOPRTBDR Tag Example 156
81. Create WSCST Screen 166
82. Change Device Description (Printer) Screen 167
83. Print Services Facility/400 Process 177
84. PSF/400 and PSF/2 Distributed Print Function 180
85. CRTDEVPRT Display Showing IGCFEAT 212
86. AS/400 Printing Process 214
87. AS/400 Printing Process with DBCS Support 215
88. Fonts for DBCS Printing 217
89. DBCS Printing via Twinax Attached Printers 219
90. AS/400 DBCS Printing via 5250WS 223
91. AS/400 DBCS Printing via PC/5250 225
92. AS/400 DBCS Printing via CM/2 227
93. AS/400 Printer Data Stream Flow with SBCS Support 230
94. AS/400 Printer Data Stream Flow with DBCS Support 231
95. Display QIGC System Value 232
96. DBCS Parameters on Printer File 233
97. DBCS Font Maintenance 239
98. LANRES/400 LAN-to-Host Objects 242
99. NetWare Printers and Queues Menu 243
100. Creating a NetWare Print Server 244
101. Creating a NetWare Print Queue 244
102. Working With LAN Print Procedures 245
103. Configuring a LAN Print Procedure 245
104. Starting LANRES/400 LAN-to-Host Print 246

105. RPG COPY Program 249
106. Adding a User Exit Program to the LAN print Procedures File 251
107. LANRES/400 Host-to-LAN Objects 255
108. Adding a Host Print Definition 257
109. Adding a Host Print Definition 257
110. Adding a Host Print Procedures Entry 258
111. Specifying a Host Print Procedure Entry 258
112. Starting the Host-to-LAN Print Job 259
113. Define Overlay Specifications 261
114. Print PFD Data 262
115. Change Source Overlay Font 263
116. Example of the ZTRNAFP Command 268
117. Example of the CPYAFP Command 272

Tables

1. Valid Combinations of CNNTYPE and DESTTYPE 34
2. Valid and Invalid Configurations for Sending from V3R1 OS/400 to V3R1 OS/400 37
3. Valid and Invalid Configurations for Sending from V3R1 OS/400 to V2 OS/400 48
4. Valid and Invalid Configurations for Sending from V3R1 OS/400 to System 390 57
5. Valid and Invalid Configurations for Sending from V3R1 OS/400 to PSF/2 64
6. Valid and Invalid Configurations for Sending from V3R1 OS/400 to PSF/6000 70
7. Extract from Table D-5 of the Printer Device Programming 107
8. OV/400 Supported Fonts and Font Substitution 108
9. Printer File Parameters Requiring PSF/400 179
10. DDS Keywords Requiring PSF/400 180
11. Small to Medium Sized IPDS Laser Printers and Their Functions . . . 193
12. Medium to Large Sized IPDS Laser Printers and Their Functions . . . 194
13. IPDS Impact Printers and Their Functions 198
14. SBCS vs. DBCS Example 207
15. Hardware for DBCS Processing 209
16. DBCS SCS Impact Line Printers 217
17. DBCS Code Pages (CCSIDs for Mixed SBCS/DBCS) 220
18. IBM 5553 Printer Device Characteristics 221
19. Equivalent LANRES/400 and NetWare Commands for LAN-to-Host Printing 243
20. Equivalent LANRES/400 and NetWare Commands for LAN-to-Host Printing 256

Special Notices

This publication is intended to provide AS/400 customers, business partners and systems specialists with additional guidance in the planning and implementation of printing applications on the AS/400, particularly in the use of the new printing related functions of Version 3.0 Release 1.0.

References in this publication to IBM products, programs or services do not imply that IBM intends to make these available in all countries in which IBM operates. Any reference to an IBM product, program, or service is not intended to state or imply that only IBM's product, program, or service may be used. Any functionally equivalent program that does not infringe any of IBM's intellectual property rights may be used instead of the IBM product, program or service.

Information in this book was developed in conjunction with use of the equipment specified, and is limited in application to those specific hardware and software products and levels.

IBM may have patents or pending patent applications covering subject matter in this document. The furnishing of this document does not give you any license to these patents. You can send license inquiries, in writing, to the IBM Director of Licensing, IBM Corporation, 500 Columbus Avenue, Thornwood, NY 10594 USA.

The information contained in this document has not been submitted to any formal IBM test and is distributed AS IS. The use of this information or the implementation of any of these techniques is a customer responsibility and depends on the customer's ability to evaluate and integrate them into the customer's operational environment. While each item may have been reviewed by IBM for accuracy in a specific situation, there is no guarantee that the same or similar results will be obtained elsewhere. Customers attempting to adapt these techniques to their own environments do so at their own risk.

Any performance data contained in this document was determined in a controlled environment, and therefore, the results that may be obtained in other operating environments may vary significantly. Users of this document should verify the applicable data for their specific environment.

The following document contains examples of data and reports used in daily business operations. To illustrate them as completely as possible, the examples contain the names of individuals, companies, brands, and products. All of these names are fictitious and any similarity to the names and addresses used by an actual business enterprise is entirely coincidental.

Reference to PTF numbers that have not been released through the normal distribution process does not imply general availability. The purpose of including these reference numbers is to alert IBM customers to specific information relative to the implementation of the PTF when it becomes available to each customer according to the normal IBM PTF distribution process.

The following terms, which are denoted by an asterisk (*) in this publication, are trademarks of the International Business Machines Corporation in the United States and/or other countries:

Advanced Function Presentation	Advanced Function Printing
AFP	AIX

APPN	AS/400
AT	Bar Code Object Content Architecture
BCOCA	ExecJet
Facsimile Support/400	GDDM
IBM	ImagePlus
InfoWindow	Intelligent Printer Data Stream
IPDS	MODCA
OfficeVision/400	Operating System/400
OS/2	OS/400
Pennant Systems	Print Services Facility
PrintManager	Proprinter
PS/2	PSF
PSF/6000	Quickwriter
Quietwriter	RS/6000
S/370	S/390
SAA	System/370
System/38	System/390
Systems Application Architecture	400

The following terms, which are denoted by a double asterisk (**) in this publication, are trademarks of other companies:

1-2-3	Lotus Development Corporation
Adobe, Adobe Type Manager, ATM, PostScript	Adobe Systems Incorporated
Centronics	Centronics Data Computer Corporation
Compaq	Compaq Computer Corporation
DEC	Digital Equipment Corporation
DeskJet, Hewlett-Packard, HP, HP PCL4, LaserJet Series 2, LaserJet, PaintJet	Hewlett-Packard Company
Epson	Seiko-Epson Corporation
Helvetica	Allied Corporation
ITC Zapf Dingbats	International Typeface Corporation
Lexmark	Lexmark International, Incorporated
Microsoft Windows, Microsoft, Windows	Microsoft Corporation
NEC	NEC Corporation
NetWare	Novell, Incorporated
Okidata	Okidata Corporation
Panasonic	Matsushita Electric Industrial Company, Limited
Seiko	Kabushiki Kaisha Hattori Seiko
Times New Roman	Monotype Corporation, Limited
TrueType	Apple Computer, Incorporated
Univers	AGFA Compugraphic Corporation
Xerox	Xerox Corporation

Other trademarks are trademarks of their respective companies.

Preface

This document describes the new printing functions available in Version 3.0 Release 1.0 for the AS/400. It provides explanations of how you might want to use the new functions with diagrams, programming samples and working examples.

This document is intended for customers, business partners and IBM systems specialists who need to understand the fundamentals of printing on the AS/400 to help them develop or advise others concerning the design and development of AS/400 printing applications.

This manual does not replace any of the other printing-related manuals or ITSO redbooks, and for a good understanding of the contents of this document you should have a good understanding of AS/400 printing as described in *AS/400 Printer Device Programming - Version 3*, SC41-3713 and the previously published ITSO documents *AS/400 Printing II*, GG24-3704 and *AS/400 Printing III*, GG24-4028.

How This Document is Organized

The document is organized as follows:

- Chapter 1, “ASCII LAN-Attached Printers”

  This chapter describes how you can print to ASCII printers which are directly attached to the LAN from the AS/400.

- Chapter 2, “Remote System Printing”

  This chapter discusses the new Remote System Print function of Version 3.0 Release 1.0, which allows you to automatically redirect spooled files to various different systems on the network.

- Chapter 3, “Printer Load Balancing”

  This chapter explores the new function allowing you to better balance the printing load on an AS/400.

- Chapter 4, “Version 3.0 Release 1.0 Printer File and DDS Enhancements”

  This chapter discusses enhancements to printer files and DDS in Version 3.0 Release 1.0.

- Chapter 5, “AS/400 Printing Enhancements”

  This chapter describes various features available via PTF which are generally not documented in other manuals.

- Chapter 6, “Advanced Host Print Transform Customization”

  This chapter contains an in-depth discussion of the host print transform function, including detailed descriptions of workstation customizing object configuration.

- Chapter 7, “Print Services Facility/400 (PSF/400)”

  This chapter explains the implications of the new Print Services Facility/400 feature.

- Chapter 8, “AS/400 Advanced Function Printers”

This chapter serves as a quick reference for all AFP printers you can attach to the AS/400.

- Chapter 9, “Double Byte Character Set Printing”

  This chapter is intended to help explain how DBCS printing works on the AS/400 for those who are not DBCS experts.

- Chapter 10, “LANRES/400 Printing”

  This chapter describes the printing functions of the LANRES/400 product.

- Appendix A, “Advanced Function Printer Utilities/400 Enhancements in V3R1”

  This appendix discusses enhancements to AFPU/400 in Version 3.0 Release 1.0.

- Appendix B, “Enhancements to the AFP to ASCII Transform”

  This appendix describes the V3R1 enhancements made to the AFP-to-ASCII conversion tool.

- Appendix C, “Using the AFP Viewer with AS/400 AFPDS Spooled Files”

  This appendix explains how you can use the AFP Viewer product to view the contents of AS/400 spooled files.

- Appendix D, “PrintManager/400 and the PM400 Tool”

  This appendix shows what functions are provided by PrintManager/400, and how you can more easily access these functions with the PM400 tool.

Related Publications

The publications listed in this section are considered particularly suitable for a more detailed discussion of the topics covered in this document.

- *AS/400 Printer Device Programming - Version 3*, SC41-3713
- *AFP Utilities/400 - Version 3*, SC41-3640
- *AS/400 SAA OfficeVision/400: Using OfficeVision/400 Word Processing*, SH21-0701
- *AS/400 ASCII Workstation Reference*, SA41-3130
- *AS/400 DDS Reference - Version 3*, SC41-3712
- *AS/400 System API Reference*, SC41-3801
- *AS/400 Workstation Customization Programming*, SC41-3605
- *Communications: OS/400 Communications Configuration Reference*, SC41-0001
- *SNA Distribution Services - Version 3*, SC41-3410
- *Advanced Function Printing: Printer Information*, G544-3290
- *3912 and 3916 Page Printer Models AS0 and AS1 Programming Reference for AS/400 Attachment*, S544-3902
- *3912 and 3916 Page Printer User's Guide*, S544-3904
- *3912 and 3916 Page Printer Enhancements Programming Reference*, S544-5216
- *AS/400 System Operations: Font Management Aid User's Guide*, SC18-2216

- *Client Access/400 for DOS Extended Memory Setup (DBCS)*, SC41-3502
- *Client Access/400 for DOS Extended Memory User's Guide (DBCS)*, SC41-3503
- *Client Access/400 for OS/2 Setup (DBCS)*, SC41-3522
- *Client Access/400 for OS/2 User's Guide (DBCS)*, SC41-3523
- *Client Access/400 for DOS Setup (DBCS)*, SC41-3558
- *Client Access/400 for DOS User's Guide (DBCS)*, SC41-3559
- *AFP Print Services Facility/2: Getting Started*, G544-3767
- *AFP Print Services Facility/2: Distributed Print Function Network Configuration Guide for OS/400*, S544-3823
- *AFP Print Services Facility/2: Type Transformer User's Guide*, G544-3796
- *About Type: IBM's Guide for Type Users*, G544-3122
- *About Type: IBM's Technical Reference for 240-Pel Digitized Type*, S544-3516
- *About Type: IBM's Samples of Digitized Type*, G544-3792
- *About Type: IBM's Technical Reference for Core Interchange Digitized Type*, S544-3708
- *Advanced Function Printing: Korean Font Catalog*, SB09-1421
- *Advanced Function Printing: Traditional Chinese Font Catalog*, SC18-0124
- *Advanced Function Printing: Simplified Chinese Font Catalog*, SC18-0133
- *Advanced Function Printing: Japanese Font Catalog*, SC18-2332
- *Network Job Entry Formats and Protocols*, SC23-0070
- *AS/400 TCP/IP Configuration and Reference - Version 3*, SC41-3420
- *IBM TCP/IP 2.0 for OS/2: Installation and Administration*, SC31-6075
- *IBM AIX Operating System: TCP/IP User's Guide*, SC23-2309
- *IBM AIX Print Services Facility/6000 Print Submission*, S544-3878
- *Print Services Facility/MVS: System Programming Guide*, S544-3672
- *Print Services Facility/VM: System Programming Guide*, S544-3680
- *IBM Intelligent Printer Data Stream Reference*, S544-3417
- *Microsoft Windows User's Guide*, Z85F-1687
- *Hewlett-Packard JetDirect Network Interface: Configuration Guide*, J2552-90001

International Technical Support Organization Publications

- *AS/400 Printing II*, GG24-3704
- *AS/400 Printing III*, GG24-4024

A complete list of International Technical Support Organization publications, with a brief description of each, may be found in:

Bibliography of International Technical Support Organization Technical Bulletins, GG24-3070.

To get listings of ITSO technical bulletins (redbooks) online, VNET users may type:

```
TOOLS SENDTO WTSCPOK TOOLS REDBOOKS GET REDBOOKS CATALOG
```

How to Order ITSO Technical Bulletins (Redbooks)

IBM employees in the USA may order ITSO books and CD-ROMs using PUBORDER. Customers in the USA may order by calling 1-800-879-2755 or by faxing 1-800-284-4721. Visa and Master Cards are accepted. Outside the USA, customers should contact their IBM branch office.

Customers may order hardcopy redbooks individually or in customized sets, called GBOFs, which relate to specific functions of interest. IBM employees and customers may also order redbooks in online format on CD-ROM collections, which contain the redbooks for multiple products.

Below is a list of ITSO publications that are currently available which relate to the AS/400.

AS/400 redbooks are also available on CD-ROM, by adding feature code #8053 to your OS/400 software profile.

- *System/36 to AS/400 System Migration*, GG24-3249-01
- *System/36 to AS/400 Application Migration*, GG24-3250-01
- *AS/400: System/38 Application Migration to AS/400*, GG24-3251-00
- *AS/400 Communication Migration*, GG24-3253--00
- *AS/400 Office in a DIA/SNADS Network*, GG24-3268-00
- *Converting S/36 Environment Application to Native*, GG24-3304-01
- *AS/400 Communications Problem Determination*, GG24-3305-00
- *SQL/400: A Guide for Implementation OS/400 V2R2*, GG24-3321-03
- *AS/400 - S/370 Connectivity*, GG24-3336-00
- *AS/400, S/38 and PS/2 as T2.1 Nodes in a Subarea Network*, GG24-3420-00
- *Writing SAA Applications for AS/400*, GG24-3438-00
- *IBM AS/400 TCP/IP Operation and Configuration*, GG24-3442-02
- *IBM AS/400 in Large Networks: A Case Study*, GG24-3447-00
- *AS/400 Communications Definitions Examples*, GG24-3449-00
- *AS/400 Object Distribution Facility and SNA RSCS PROFS*, GG24-3479-00
- *IBM AS/400 ISDN Connectivity*, GG24-3517-00
- *OfficeVision/400 and AS/400 Query Applications in a Multilingual Environment*, GG24-3579--00
- *Managing Multiple AS/400s in a Peer Network*, GG24-3614-02
- *OfficeVision/400 in a DIA/SNADS Network*, GG24-3625-00
- *AS/400 Audit and Security Enhancements in OS/400*, GG24-3639-00
- *WAF/400 5363 Optical Subsystem Configuration and Installation*, GG24-3680-00
- *OfficeVision/400 Printing*, GG24-3697-00
- *AS/400 Printing II*, GG24-3704-00
- *AS/400 APPN with PS/2 APPN, 3174 APPN, 5394 and Subareas*, GG24-3717-00
- *AS/400 CPI Communications Selected Topics*, GG24-3722-00
- *AS/400 Performance Management V2R2*, GG24-3723-01
- *Multimedia Examples with the AS/400 Using AVC*, GG24-3743-00
- *Getting Started with AS/400 OSI*, GG24-3758-00
- *AS/400 Communication Definition Examples Volume 2*, GG24-3763-00
- *Installation Considerations for National Language*, GG24-3790-00

- *Artificial Intelligence and AS/400: Neural Networks and Knowledge Based Systems*, GG24-3793-00
- *Facsimile Support/400 Implementation*, GG24-3797-00
- *Application Development on the AS/400*, GG24-3806-00
- *PC Support/400 Asynchronous and SDLC Configuration Examples*, GG24-3808-00
- *5494 & OS/2 ES: Connecting Remote User Groups*, GG24-3828-00
- *AS/400 Automation Using NetView and SNA MS Transport*, GG24-3841-00
- *DOS PCS/400 in OS/2 V2 Virtual DOS Machine*, GG24-3856-00
- *WAF/400 Administration and User Examples*, GG24-3866-00
- *OfficeVision/400 Application Enabler*, GG24-3868-00
- *Cooperative Processing and GUI in an AS/400 Environment*, GG24-3877-00
- *OfficeVision/400 Application Programming Interfaces V2R2*, GG24-3885-00
- *OfficeVision/400 Integration with CallPath/400 and Fax Support*, GG24-3896-00
- *AS/400 Performance Capacity Planning V2R2*, GG24-3908-00
- *AS/400 System Availability and Recovery for V2R2*, GG24-3912-00
- *AS/400 Network Routing Facility*, GG24-3918-00
- *AD/CYCLE Code/400, ADM/400 and ADS/400*, GG24-3928-00
- *OfficeVision/400 V2 Technical Tips and Techniques*, GG24-3937-00
- *CICS/400 Migration from Mainframe CICS*, GG24-4006-00
- *Using DOS PC Support/400 with Novell NetWare 3.11 and NetWare for SAA 1.3*, GG24-4013-00
- *Ultimedia Video Delivery System/400*, GG24-4020-00
- *AS/400 Client Series - Products and Positioning*, GG24-4027-01
- *IBM AS/400 Printing III*, GG24-4028-00
- *Performance Benchmarking for the AS/400*, GG24-4030-00
- *AS/400 and RISC System/6000 Connectivity*, GG24-4039-00
- *Using V2R3 DOS and OS/2 PC Support/400 under OS/2 2.1*, GG24-4070-01
- *Apple Macintosh and the AS/400*, GG24-4071-00
- *OfficeVision/400 Application Enabler Version 2 Release 3*, GG24-4072-00
- *The IBM AS/400 as a TCP/IP Network File Server*, GG24-4092-00
- *ENVY/400 Hints and Tips*, GG24-4094-00
- *Introduction to ENVY/400*, GG24-4126-00
- *Managing Operations on AS/400s with IBM SAA SystemView OMEGAMON Services/400*, GG24-4136-00
- *AS/400 Integrated Language Environment*, GG24-4148-00
- *CICS/400 V2R3 Task Book*, GG24-4182-00
- *AS/400 V2R3 Software Life Cycle Mgmt with ADM/400*, GG24-4187-00
- *An Implementation Guide for AS/400 Security and Auditing including C2, Cryptography, Communications and PC Connectivity*, GG24-4200-00
- *IBM AS/400 APPN Problem Management*, GG24-4222-00
- *DB2/400 Advanced Database Functions*, GG24-4249-00
- *V2R3 PC Support/400 and Microsoft Windows 3.1 Advanced Topics*, GG24-4253-00
- *OfficeVision/400: Printer Setup in an OfficeVision Environment*, GG24-4283-00
- *AS/400 Client Series Handbook*, GG24-4285-00
- *Backup Recovery and Media Services/400 Implementation Tips and Techniques*, GG24-4300-00
- *IBM Current-OV/400 Workgroup Program V1 R1 Modification 0 Refresh 1*, GG24-4377-00
- *LAN Server/400 A Guide to Using AS/400 as a File Server*, GG24-4378-00
- *Client Access/400 Planning Guide*, GG24-4422-00
- *Implementing Hierarchical Storage on the AS/400*, GG24-4450-00

Acknowledgments

The advisor for this project was:

Gary Mullen-Schultz
International Technical Support Organization, Rochester Center

The authors of this document are:

Alain Badan
IBM Switzerland

John Ditchburn
IBM United Kingdom

C.H. Ma
IBM Taiwan

Kevin Vette
Rochester Programming Laboratory

Gary Mullen-Schultz
International Technical Support Organization, Rochester Center

This publication is the result of a residency conducted at the International Technical Support Organization, Rochester Center.

Thanks to the following people for the invaluable advice and guidance provided in the production of this document:

Mark Bukowski, IBM Rochester
Marty Burkel, IBM Rochester
Eddy Gauthier, IBM Belgium
Steve Guimont, IBM Rochester
Ron Haugen, IBM Rochester
James Hawn, IBM Rochester
Rod Johnson, IBM Rochester
Jack Klarfeld, Pennant Systems, Boulder
Danny Klema, IBM Rochester
Freddie Kruger
Dwight Lewis, Lexmark
Joe Lindsay, IBM Rochester
Terry Luebbe, IBM Rochester
Frank Malin, IBM Rochester
Babette Markey, Pennant Systems, Boulder
Kris “La Hub” Peterson, IBM Rochester
Mira Shnier, IBM Canada
Jean Stangler, IBM Rochester
Charles “Van” Van Hauten, IBM Rochester
Aditya Wresniyandaka, IBM Indonesia

Staff of the International Technical Support Organization, Rochester Center.

Chapter 1. ASCII LAN-Attached Printers

In Version 3.0 Release 1.0 OS/400* supports ASCII printers directly attached to a local area network (LAN). The information provided in this chapter includes:

- How ASCII LAN-attached printing works
- Benefits of using ASCII LAN-attached printers
- ASCII printers attached via the IBM* 4033 LAN Connection for Printers and Plotters (IBM 4033)
  - Configuration and printer sharing
- ASCII printers attached using the MarkNet XLe
  - Configuration and printer sharing
- ASCII printers attached using the IBM Integrated Network Option (INO)
  - Configuration and printer sharing
- Error recovery with ASCII LAN-attached printers
- Restrictions when using ASCII LAN-attached printers
- Direct printing to LAN-attached printers via TCP/IP

This new support requires that the ASCII printers be attached to the IBM 4033 or MarkNet XLe device, or that the printer has a Lexmark** MarkNet or MarkNet XL integrated network option (INO) resident in the printer. The IBM 4039 printer is an example of a printer which can accept an INO adapter.

Note: The Integrated Network Option (INO) is referred to in various ways, including:

- Internal Network Adapter (INA)
- MarkNet
- MarkNet XL

We will use the terms Integrated Network Option and INO throughout this document.

OS/400 provides all the support for ASCII printers attached to the LAN. No licensed program product (such as PSF*/400) is required. Once the physical environment is created, the ASCII LAN-attached printer operates the same as any other ASCII printer attached to an AS/400* system.

Note that it is also possible to print to certain ASCII LAN-attached printers via TCP/IP. This is discussed in 1.8, “Printing to ASCII Printers via TCP/IP” on page 24.

1.1 How ASCII LAN-Attached Printing Works

Figure 1 on page 2 provides a physical view of how ASCII LAN-attached printers connect to the AS/400 system:

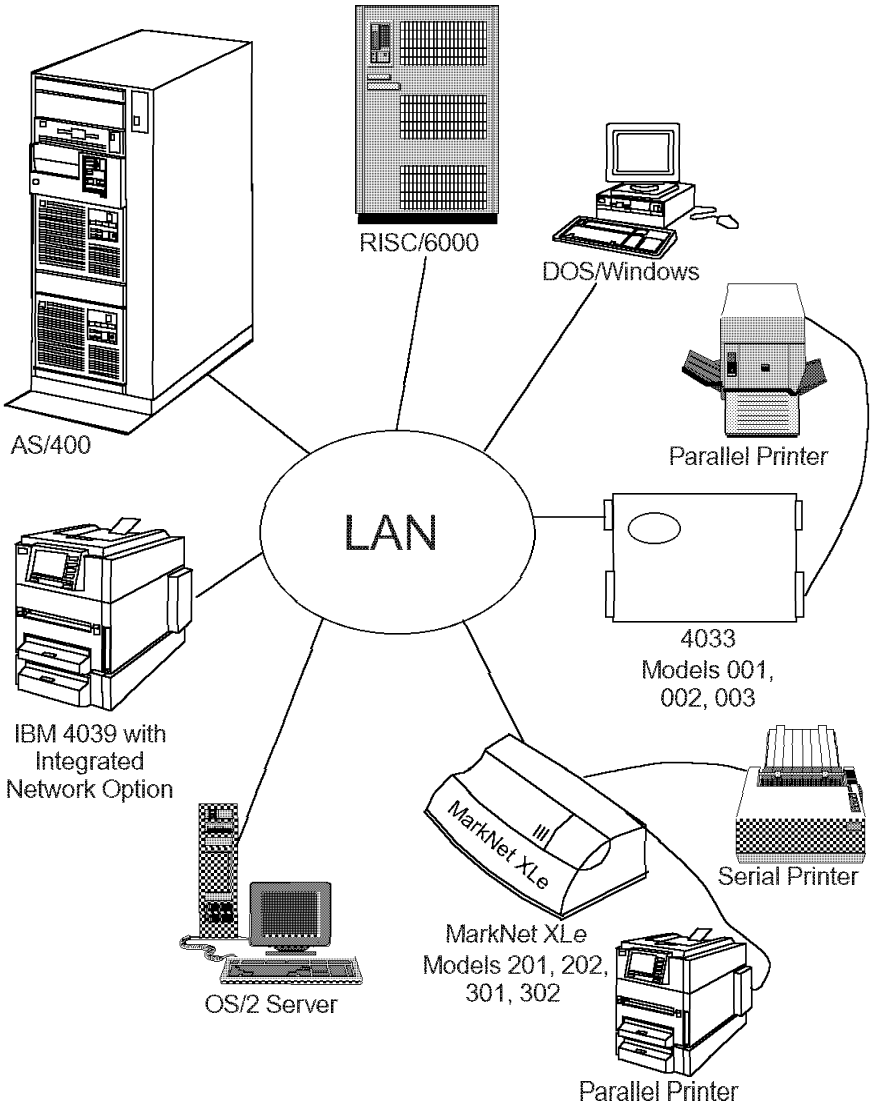

Figure 1. Physical View of ASCII LAN-Attached Printers

Once the physical environment is in place and the correct configuration for the ASCII printer complete, printing operations can begin. As with other printers, the Start Printer Writer (STRPRTWTR) command is used to begin printing operations. When the STRPRTWTR command is run, the printer's device description switched line list (SWTLINLST) parameter is used to identify available communication lines. These communication lines must be either Ethernet or token-ring.

The LAN driver program is called by the spool writer to handle printing to LAN-attached printers. Figure 2 on page 3 shows the various functions for which the LAN driver program is called:

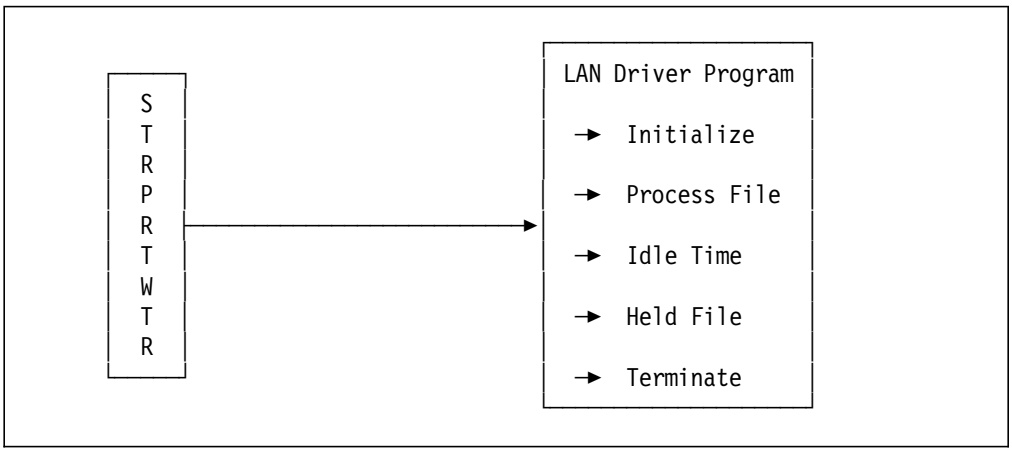

Figure 2. ASCII LAN-Attached Printers File Processing

When the printer writer is started, the LAN driver's *Initialization* function is called. At that time, the LAN driver program creates all the internal data spaces needed and attempts to establish a link with the line. The IBM 4033, MarkNet XLe and INO use the LexLink protocol, which is a proprietary network printer protocol developed by Lexmark International, Inc., based on IEEE 802.2. Since the LexLink protocol is not natively supported by OS/400, network controllers are used to communicate with the device.

When called with the *Process File* function, the LAN driver first processes the attributes of the file received from the writer to make sure that the file can be printed on the device. An attempt to lock the physical device will be made using a lock request from the LAN driver to the physical device (or 4033). If the lock fails after a number of seconds (determined by the *Activation timer* parameter of the device description) a device not available message will be sent to the message queue specified on the STRPRTWTR command, allowing the user the option of retrying or potentially acquiring the device from another system.

Once the physical device has been locked, the device is ready to accept the print data. If the printer device description is configured with TRANSFORM(*YES) and the file is an SCS data stream, the host print transform function is used to transform the spooled file from SCS to ASCII using the manufacturer type and model specified in the device description of the printer.

Notes:

1. Spooled files in *USERASCII are not changed when the transform parameter is set to *YES.
2. If the SCS data stream includes transparency commands (ATRN, x'03') , the host print transform function includes these commands during the transformation into ASCII.

If the printer is configured as a continuous forms printer, alignment for the spooled file may be done. If you are using a laser printer you will likely want to change the Form feed value to *AUTOCUT.

The LAN driver will determine when the alignment is needed. The first line of data will be sent to the printer and the alignment message will be sent to the message queue specified in the STRPRTWTR command.

If there is no file available for printing, the writer will go into an event wait state waiting for another file to become available, or for the time specified on the device description's Inactivity timer to pass. If the time specified on the inactivity timer of the printer device description passes before a file becomes available on the output queue, the writer will call the LAN driver program with the *Idle Time* function. The LAN driver program will then release or unlock the printer so that other users on the LAN can directly use the device.

If the processing of a file is interrupted by a hold, the writer will call the LAN driver program with the *Held File* function to reset any values which may still be set from that file to ensure that the next spooled file is printed correctly.

When the writer is in the process of ending, the LAN driver program is called with the *Terminate* function in order to do any clean up which is needed, such as destroying the LAN internal driver spaces. The driver will also release or unlock the device if necessary.

Note: When a spooled file is written, the data is transferred to the buffer of the printer. When the data has been completely transferred, the system will either delete or save the spooled file depending on the Save spooled file attribute. Because this process is much faster than the printer is capable of printing, it is possible that the spooled file will be deleted before it is printed. If an error occurs while printing, you must be careful in handling the error. For instance, if you switch off the printer to recover from the error, you may lose the data before it prints. We recommend that you specify SAVE(*YES) on your printer files for critical output so that they can be resent if necessary.

1.2 Benefits of Using ASCII LAN-Attached Printers

ASCII LAN-attached printers offer many benefits over printers attached using other methods. Some of these benefits are:

- Low-cost

  Typically, ASCII printers are less expensive than larger SCS or IPDS* printers. With new technology, ASCII printers are quickly becoming capable of performing advanced functions formerly found only on SCS or IPDS printers.

- Central printing and portability

  Using a LAN to attach ASCII printers allows you to position the printer at the point where most of your printing requirements are. If this requirement changes, the printer can be physically moved to another point on the LAN. Contrast this with twinax attached printers, which must be located close to the actual AS/400 itself.

- Sharing the printer between different operating systems

  Sharing, in this case, actually has two benefits. The first is that any user attached to the LAN can send print jobs to the printer. The second is a LAN-attached ASCII printer can perform printing for an AS/400, an RS/6000*, or a PS/2* running OS/2*.

  Note: The RS/6000 and PS/2 must have the Network Print Adapter Utility installed in order to control the printer. The utility is offered by Lexmark and IBM, and included on diskette when you purchase an IBM 4033 or INO. The utility allows PCs and RS/6000s to use the 4033

LAN Connection adapter to attach to the LAN. An IBM 4039 printer with the Integrated Network Option can also attach to the LAN. Many sharing problems might be avoided by letting the AS/400 control the printer and using a function such as Client Access/400 virtual print, remote system printing, or LPR/LPD to route the files to the AS/400 from the PC, AS/400, or RS/6000.

- Eliminating emulation requirements

  Before the ASCII LAN-attached printer function became available, ASCII printers used with AS/400 systems were predominantly used through an emulation program and attached to a physical device such as a PC.

  ASCII printers attached to the LAN can receive print jobs composed of either the SCS or USERASCII data streams. The SCS data stream is changed to ASCII by the host print transform function. The USERASCII data stream is sent directly to the printer.

- Using across bridges

  In general, you can access LAN printers attached via bridges, but not routers. For example, the IBM 4033, the MarkNet XLe and the INO support the IBM 8209 LAN Bridge. See the specific hardware documentation for more details.

1.3 ASCII Printers Attached via the IBM 4033

This topic covers ASCII printers attached to the LAN via an IBM 4033. This mode of connection must be used for all ASCII printers with the exception of the IBM/Lexmark printers having an Integrated Network Option (INO), such as the IBM/Lexmark 4039 printer. This includes OEM printers such as Hewlett-Packard** (HP**) printers containing their own network adapter cards.

This chapter will discuss only the “original” 4033 (Models 001, 002, and 003). These have been replaced by the new MarkNet XLe version (Models 201, 202, 301 and 302), which are discussed in 1.4, “ASCII Printers Attached via the MarkNet XLe” on page 11.

1.3.1 Configuration

To correctly configure descriptions (line, network controller, network device, and printer device) certain parameters on these descriptions must have specific values.

1.3.1.1 Line Description Parameters

All lines must be either token-ring or Ethernet. If Ethernet is used, the Ethernet standard parameter value must be *IEEE8023 or *ALL.

Assuming your line description already exists, use the Change Line Description (Token-Ring) (CHGLINTRN) or Change Line Description (Ethernet) (CHGLINETH) commands to update the SSAP (source service access point) list in the line description. The AS/400 requires an SSAP value of 12 for ASCII LAN-attached printers connected through the original IBM 4033.

```
                    Change Line Desc (Token-Ring) (CHGLINTRN)
Type choices, press Enter.
SSAP list:
  Source service access point  .   04            02-FE, *SAME, *SYSGEN
  SSAP maximum frame . . . . . .   *MAXFRAME     *MAXFRAME, 265-16393
  SSAP type  . . . . . . . . . .   *SNA          *CALC, *NONSNA, *SNA, *HPR
  Source service access point  .   06            02-FE
  SSAP maximum frame . . . . . .   *MAXFRAME     *MAXFRAME, 265-16393
  SSAP type  . . . . . . . . . .   *NONSNA       *CALC, *NONSNA, *SNA, *HPR
  Source service access point  .   AA            02-FE
  SSAP maximum frame . . . . . .   *MAXFRAME     *MAXFRAME, 265-16393
  SSAP type  . . . . . . . . . .   *NONSNA       *CALC, *NONSNA, *SNA, *HPR
  Source service access point  .   12            02-FE
  SSAP maximum frame . . . . . .   *MAXFRAME     *MAXFRAME, 265-16393
  SSAP type  . . . . . . . . . .   *NONSNA       *CALC, *NONSNA, *SNA, *HPR
                                                                    More...
F3=Exit   F4=Prompt   F5=Refresh   F12=Cancel   F13=How to use this display
F24=More keys
```

Figure 3. Change Line Description Token-Ring Display

Not all of the parameters that make up the line description are discussed here. Only the parameters required to support ASCII LAN-attached printers are shown.

SSAP Source service access point. For LAN printer applications, specify 12. The AS/400 requires an SSAP value of 12 for ASCII LAN-attached printers.

Notes:

1. If the SSAP of 12 is not added to existing communications lines used for ASCII LAN-attached printers, message `CPI400C - Communication link not started on line` is sent to the message queue with a reason code of 1.
2. When you create a new line description for token-ring or Ethernet, you can specify an SSAP of *SYSGEN. In this case the system generates the source service access points 04, 12, AA and C8.

MAXFRAME SSAP maximum frame. Specifies the maximum SSAP frame size. Specify *MAXFRAME; this will take the value from the Maxframe parameter in this command.

SSAP Type Source service access point type. This value must be *NONSNA. This means SNA communications cannot be used.

1.3.1.2 Network Controller and Network Device Description Parameters

Network controller and network device descriptions are needed to complete the communications connection to the ASCII LAN-attached printer.

If they don't exist, they are created automatically when the STRPRTWTR command is run for an ASCII printer attached to the LAN.

1.3.1.3 Printer Device Description Parameters

An ASCII printer device description must be manually configured. Automatic configuration does not support configuration of ASCII LAN-attached printers. The Create Device Description (Printer) (CRTDEVPRT) command must be used.

```
                    Create Device Desc (Printer) (CRTDEVPRT)
Type choices, press Enter.
Device description . . . . . . . DEVD         > LAN4029
Device class . . . . . . . . . . DEVCLS       > *LAN
Device type  . . . . . . . . . . TYPE         > 3812
Device model . . . . . . . . . . MODEL        > 1
Switched line list . . . . . . . SWTLINLST      ITSCTRN
                          + for more values
LAN remote adapter address . . . ADPTADR        10005A1095A2
Adapter type . . . . . . . . . . ADPTTYPE       *EXTERNAL
Adapter connection type  . . . . ADPTCNNTYP     *PARALLEL
........... . . . . . . . . . . ....           .....
Port number  . . . . . . . . . . PORT
........... . . . . . . . . . . ....           .....
Physical attachment              ATTACH
........... . . . . . . . . . . ....           .....
Font:                            FONT
  Identifier . . . . . . . . . .                11
  Point size . . . . . . . . . .                *NONE
Form feed  . . . . . . . . . . . FORMFEED       *AUTOCUT
........... . . . . . . . . . . ....           .....
Activation timer . . . . . . . . ACTTMR         170
Inactivity timer . . . . . . . . INACTTMR       *ATTACH
........... . . . . . . . . . . ....           .....
Host print transform . . . . . . TRANSFORM      *YES
Manufacturer type and model  . . MFRTYPMDL      *IBM4029
Paper source 1 . . . . . . . . . PPRSRC1        *MFRTYPMDL
Paper source 2 . . . . . . . . . PPRSRC2        *MFRTYPMDL
Envelope source  . . . . . . . . ENVELOPE       *MFRTYPMDL
ASCII code page 899 support  . . ASCII899       *NO
........... . . . . . . . . . . ....           .....

                                                                   More...
F3=Exit   F4=Prompt   F5=Refresh   F12=Cancel   F13=How to use this display
F24=More keys
```

Figure 4. Create Device Description Printer Display

Not all of the parameters that make up the printer device description are discussed here. Only the parameters required to support ASCII LAN-attached printers are shown.

DEVD Device description. Specifies the name of the device description.

DEVCLS Device class. Specifies the device class for the printer. This value must be *LAN and it indicates the ASCII printer is connected to a local area network (LAN).

TYPE Device type. Specifies the type of printer this device configuration represents. As IBM 3812 emulation is used, enter 3812.

MODEL Device model. Specifies the model number of the device. As IBM 3812 Model 1 emulation is used, enter 1.

SWTLINLST Switched line list. Specifies the name of the switched communications lines to which the printer is associated when DEVCLS(*LAN) is specified. A maximum of eight switched communications lines can be specified.

ADPTADR LAN remote adapter address (printer address). Specifies the 12-character hexadecimal LAN address of the ASCII printer when DEVCLS(*LAN) is specified. Valid values range from 000000000001 through FFFFFFFFFFFE.

Note: The adapter address for the 4033 is printed on the outside of the 4033, although this value may be overridden by a utility program.

Tip:

For the IBM 4033 the first eight characters are usually 10005ABExxxx.

For the Integrated Network Option the first eight characters are usually 10005A10xxxx.

ADPTTYPE Adapter type. Specifies the type of LAN printer to be used when DEVCLS(*LAN) is specified. As the printer is connected to the IBM 4033 LAN adapter, specify *EXTERNAL.

ADPTCNNTYP Adapter connection type. Specifies the type of ports supported by the external LAN printer adapter when DEVCLS(*LAN) and ADPTTYPE(*EXTERNAL) are specified.

***PARALLEL** The printer is attached to the adapter using the parallel port.

***SERIAL** The serial port on the adapter is used to communicate with the attached printer.

Note: If *SERIAL is selected as the adapter connection type, the following parameters need to be specified:

- LINESPEED - Line speed
- WORDLEN - Word length
- PARITY - Type of parity
- STOPBITS - Stop bits
- ATTACH - Physical attachment

PORT Port number. For ASCII LAN-attached devices with adapter type *EXTERNAL, if there is more than one serial or parallel port available, this parameter specifies which port is used. Possible values are 0 through 17. This parameter is not required for the 4033 adapter.

ATTACH Physical attachment. For ASCII LAN-attached printers, specifies the physical attachment of the LAN adapter.

Note: This parameter is used only if ADPTTYPE is *EXTERNAL and ADPTCNNTYPE is *SERIAL.

For ASCII LAN-attached printers, possible values are:

***DIRECT** Specifies EIA-232 direct attachment (XON/XOFF pacing).

***WIRE4** Specifies EIA-232 4-wire attachment (DTR pacing).

FONT Font identifier. Specifies the font identifier used by the printer.

FORMFEED Form feed. Specifies the mode in which forms are fed into the device. Although the host print transform does not use this parameter, the LAN driver program does. Possible values are:

***AUTOCUT** Use this for printers that automatically feed paper into the printer. This would include most laser and ink-jet printers.

***CONT** Use this for printers that use continuous forms. This would include most dot-matrix printers.

ACTTMR Activation timer. Specifies the amount of time (in seconds) to wait for the printer to respond to the activation request from the host system. If the printer does not respond within this time, it is considered not available and a cancel/retry/acquire message is issued to the user.

For example, if the activation timer value is 120 seconds, the writer attempts to lock the adapter every 15 seconds for 120 seconds. After 120 seconds elapses, a cancel/retry message is issued. A cancel reply to the message cancels the writer.

A retry reply causes the writer to attempt to lock the adapter again every 15 seconds for 120 seconds. If the lock attempt fails the cancel/reply message is issued again. If the message is not answered in five minutes, the system automatically attempts to lock the adapter.

There is also an allocate (A) reply which releases the 4033 from any system. Be careful using this, as it may “steal” the printer while in the middle of another job.

Possible values are:

170 The printer waits 170 seconds. This is the default value.

Activation-timer Specify a number indicating the number of seconds before the device is considered not available. When this number of seconds has elapsed, an inquiry message is issued.

If DEVCLS(*LAN) is specified, valid values range from 1 through 2550.

INACTTMR Inactivity timer. Specifies an inactivity timer (time-out) value. For ASCII LAN-attached printers, this value indicates the amount of time the printer writer keeps a lock on the device before releasing it.

Possible values are:

- *ATTACH

  When the printer is defined as *EXTERNAL, *ATTACH sets *NOMAX as the value for releasing the adapter back to the network. *NOMAX is used if the printer is attached to a 4033 because the 4033 does not support sharing between systems.

- *NOMAX

- *SEC15
- *SEC30
- Inactivity timer. The range to select from is 1 through 30 minutes.

TRANSFORM Host print transform function. The host print transform function value defaults to *YES when the device class (DEVCLS) parameter value is *LAN.

***YES** The printer uses the host print transform function.

***NO** The printer does not use the host print transform function.

MFRTYPMDL Manufacturer type and model. The manufacturer, type, and model for the printer using the host print transform function.

PPRSRC1 Paper source 1. For printers that use the host print transform function, the size of paper in paper source 1.

PPRSRC2 Paper source 2. For printers that use the host print transform function, the size of paper in paper source 2.

ENVELOPE Envelope source. For printers using the host print transform function, the type of envelope in the third paper source.

ASCII899 ASCII code page 899 support. For printers using the host print transform function, if the ASCII code page 899 (symbols) is installed.

1.3.2 Sharing ASCII LAN-Attached Printers via IBM 4033

The IBM 4033 is not designed to be shared between multiple platforms, although it is possible to do so. We recommended that you not share printers attached to a 4033 with other systems. If you need to share a printer between systems, we recommend you use a printer with a Lexmark MarkNet or MarkNet INO card, or attach it via a MarkNet XLe. Refer to 1.4.2, “Sharing ASCII LAN-Attached Printers via MarkNet XLe” on page 16 for information about sharing printers with the MarkNet XLe, and 1.5.2, “Sharing ASCII LAN-Attached Printers via INO” on page 21 for information about sharing printers with the INO card.

The activation timer parameter is used to determine how long to retry acquiring the device before issuing a message. The system attempts to acquire the device every 15 seconds until the device is successfully acquired or this timer value has been exceeded. At that point, a message is issued (`CPA338A - Not able to allocate device`) and you may either cancel the writer, retry acquiring the device or possibly take the device away from the other system. See 1.6.1, “Errors Involving the Communications Link” on page 22 for more details regarding this message.

The inactivity timer parameter specifies the amount of time for the writer to wait before releasing the printer. When there are no more spooled files ready to print, the system will wait the amount of time specified in the inactivity timer and then release the printer so that other systems can use it. The default value for the inactivity timer parameter is *ATTACH which defaults to *NOMAX for the 4033. With the value set to *NOMAX, the system will not give up the device until the writer is ended. This value should be used for the original IBM 4033 so that the non-volatile RAM is not used up.

If you set the inactivity timer parameter to a specific time (such as one minute) the system will wait for that length of time for a spooled file to become ready. If

no spooled files become ready during that time period, the system will release the printer but the writer will not end. While the printer is released, it is possible for other systems to acquire the printer and use it to print. If, on the first system, a spooled file becomes ready to print, the system will try to reacquire the device. If the device is not busy, the file will be printed. If the device is busy, the same message will be issued that is issued when starting the writer to a device that is busy allowing you to cancel or retry acquiring the device.

In order to get around some of the problems with sharing printers attached to a 4033, consider routing files to be printed from other AS/400s, PCs, and RS/6000s to a single AS/400. This AS/400 will be the only platform which actually "controls" the IBM 4033. You can make use of the virtual print function of Client Access/400, remote system printing, or LPR/LPD in order to route the files to the AS/400 in ASCII format. They can then be printed along with AS/400 output using the ASCII LAN-attached printer support.

1.4 ASCII Printers Attached via the MarkNet XLe

This topic covers ASCII printers attached to the LAN via a MarkNet XLe. The MarkNet XLe replaces the original IBM 4033, and solves the printer sharing problems of that product. Models 201 (token-ring) and 202 (Ethernet) each have two high-speed IEEE 1284 bidirectional parallel output ports. Models 301 (token-ring) and 302 (Ethernet) each have two high-speed IEEE 1284 bidirectional parallel output ports as well as one RS232 serial output port. All models support concurrent printing to all ports from the AS/400.

Important!

You need AS/400 PTF SF21224 for printing to the MarkNet XLe, and level 34 of the MarkNet XLe flash code.

1.4.1 Configuration

To correctly configure descriptions (line, network controller, network device, and printer device) certain parameters on these descriptions must have specific values.

1.4.1.1 Line Description Parameters

All lines must be either token-ring or Ethernet. If Ethernet is used, the Ethernet standard parameter value must be *IEEE8023 or *ALL.

Assuming your line description already exists, use the Change Line Description (Token-Ring) (CHGLINTRN) or Change Line Description (Ethernet) (CHGLINETH) commands to update the SSAP (source service access point) list in the line description. The AS/400 requires SSAP values of 12, 16 and 1A for ASCII LAN-attached printers connected through the MarkNet XLe. These three entries allow you to start three writers to the MarkNet XLe device; two for parallel and one for serial.

```
                    Change Line Desc (Token-Ring) (CHGLINTRN)
Type choices, press Enter.
SSAP list:
  Source service access point  .   04            02-FE, *SAME, *SYSGEN
  SSAP maximum frame . . . . . .   *MAXFRAME     *MAXFRAME, 265-16393
  SSAP type  . . . . . . . . . .   *SNA          *CALC, *NONSNA, *SNA, *HPR
  Source service access point  .   06            02-FE
  SSAP maximum frame . . . . . .   *MAXFRAME     *MAXFRAME, 265-16393
  SSAP type  . . . . . . . . . .   *NONSNA       *CALC, *NONSNA, *SNA, *HPR
  Source service access point  .   AA            02-FE
  SSAP maximum frame . . . . . .   *MAXFRAME     *MAXFRAME, 265-16393
  SSAP type  . . . . . . . . . .   *NONSNA       *CALC, *NONSNA, *SNA, *HPR
  Source service access point  .   12            02-FE
  SSAP maximum frame . . . . . .   *MAXFRAME     *MAXFRAME, 265-16393
  SSAP type  . . . . . . . . . .   *NONSNA       *CALC, *NONSNA, *SNA, *HPR
  Source service access point  .   16            02-FE
  SSAP maximum frame . . . . . .   *MAXFRAME     *MAXFRAME, 265-16393
  SSAP type  . . . . . . . . . .   *NONSNA       *CALC, *NONSNA, *SNA, *HPR
  Source service access point  .   1A            02-FE
  SSAP maximum frame . . . . . .   *MAXFRAME     *MAXFRAME, 265-16393
  SSAP type  . . . . . . . . . .   *NONSNA       *CALC, *NONSNA, *SNA, *HPR
                                                                      More...
F3=Exit   F4=Prompt   F5=Refresh   F12=Cancel   F13=How to use this display
F24=More keys
```

Figure 5. Change Line Description Token-Ring Display

Not all of the parameters that make up the line description are discussed here. Only the parameters required to support ASCII LAN-attached printers are shown.

SSAP Source service access point. For LAN printer applications, specify 12, 16 and 1A.

Notes:

1. If the SSAP values are not added to existing communications lines used for ASCII LAN-attached printers, message `CPI400C - Communication link not started on line` is sent to the message queue with a reason code of 1.

MAXFRAME SSAP maximum frame. Specifies the maximum SSAP frame size. Specify *MAXFRAME; this will take the value from the Maxframe parameter in this command.

SSAP Type Source service access point type. This value must be *NONSNA. This means SNA communications cannot be used.

1.4.1.2 Network Controller and Network Device Description Parameters

Network controller and network device descriptions are needed to complete the communications connection to the ASCII LAN-attached printer.

If they don't exist, they are created automatically when the STRPRTWTR command is run for an ASCII printer attached to the LAN.

1.4.1.3 Printer Device Description Parameters

An ASCII printer device description must be manually configured. Automatic configuration does not support configuration of ASCII LAN-attached printers. The Create Device Description (Printer) (CRTDEVPRT) command must be used.

The MarkNet XLe is unique in that you can use both *INTERNAL and *EXTERNAL for the Adapter type parameter. The first (*INTERNAL) is called *compatibility mode*, and makes the MarkNet XLe look like an Integrated Network Option to the AS/400. This mode does not allow you to use the multiple parallel/serial ports of the device. You would configure this mode as described in 1.5, “ASCII Printers Attached via the Integrated Network Option” on page 17. Since this mode is less flexible, we do not recommend you configure the MarkNet XLe as *INTERNAL.

The second (*EXTERNAL) is the supported configuration, and will be discussed in this section. We use the Port number parameter in the device description on the AS/400 to determine which printer is used.

```
                    Create Device Desc (Printer) (CRTDEVPRT)
Type choices, press Enter.
Device description . . . . . . . DEVD         > LAN4029
Device class . . . . . . . . . . DEVCLS       > *LAN
Device type  . . . . . . . . . . TYPE         > 3812
Device model . . . . . . . . . . MODEL        > 1
Switched line list . . . . . . . SWTLINLST      ITSCTRN
                          + for more values
LAN remote adapter address . . . ADPTADR        10005ABE9843
Adapter type . . . . . . . . . . ADPTTYPE       *EXTERNAL
Adapter connection type  . . . . ADPTCNNTYP     *PARALLEL
........... . . . . . . . . . . ....           .....
Port number  . . . . . . . . . . PORT           1
........... . . . . . . . . . . ....           .....
Physical attachment              ATTACH
........... . . . . . . . . . . ....           .....
Font:                            FONT
  Identifier . . . . . . . . . .                11
  Point size . . . . . . . . . .                *NONE
Form feed  . . . . . . . . . . . FORMFEED       *AUTOCUT
........... . . . . . . . . . . ....           .....
Activation timer . . . . . . . . ACTTMR         170
Inactivity timer . . . . . . . . INACTTMR       *SEC15
........... . . . . . . . . . . ....           .....
Host print transform . . . . . . TRANSFORM      *YES
Manufacturer type and model  . . MFRTYPMDL      *IBM4039HP
Paper source 1 . . . . . . . . . PPRSRC1        *MFRTYPMDL
Paper source 2 . . . . . . . . . PPRSRC2        *MFRTYPMDL
Envelope source  . . . . . . . . ENVELOPE       *MFRTYPMDL
ASCII code page 899 support  . . ASCII899       *NO
........... . . . . . . . . . . ....           .....

                                                                   More...
F3=Exit   F4=Prompt   F5=Refresh   F12=Cancel   F13=How to use this display
F24=More keys
```

Figure 6. Create Device Description Printer Display

Not all of the parameters that make up the printer device description are discussed here. Only the parameters required to support ASCII LAN-attached printers are shown.

DEVD Device description. Specifies the name of the device description.

DEVCLS Device class. Specifies the device class for the printer. This value must be *LAN and it indicates the ASCII printer is connected to a local area network (LAN).

TYPE Device type. Specifies the type of printer this device configuration represents. As IBM 3812 emulation is used, enter 3812.

MODEL Device model. Specifies the model number of the device. As IBM 3812 Model 1 emulation is used, enter 1.

SWTLINLST Switched line list. Specifies the name of the switched communications lines to which the printer is associated when DEVCLS(*LAN) is specified. A maximum of eight switched communications lines can be specified.

ADPTADR LAN remote adapter address (printer address). Specifies the 12-character hexadecimal LAN address of the ASCII printer when DEVCLS(*LAN) is specified. Valid values range from 000000000001 through FFFFFFFFFFFE.

Note: The adapter address for the MarkNet XLe is printed on the back side of the device, although this value may be overridden by a utility program.

Tip:

For the MarkNet XLe the first eight characters are usually 10005A10xxxx.

ADPTTYPE Adapter type. Specifies the type of LAN printer to be used when DEVCLS(*LAN) is specified. As the printer is connected to the MarkNet XLe, specify *EXTERNAL.

ADPTCNNTYP Adapter connection type. Specifies the type of ports supported by the external LAN printer adapter when DEVCLS(*LAN) and ADPTTYPE(*EXTERNAL) are specified.

***PARALLEL** The printer is attached to the adapter using the parallel port.

***SERIAL** The serial port on the adapter is used to communicate with the attached printer.

Note: If *SERIAL is selected as the adapter connection type, the following parameters need to be specified:

- LINESPEED - Line speed
- WORDLEN - Word length
- PARITY - Type of parity
- STOPBITS - Stop bits
- ATTACH - Physical attachment

PORT Port number. For ASCII LAN-attached devices with adapter type *EXTERNAL, if there is more than one serial or parallel port available, this parameter specifies which port is used. Possible values are 0 through 17. For the MarkNet XLe the following values are used:

Value	Port
0	Serial
1	Parallel 1
2	Parallel 2

ATTACH Physical attachment. For ASCII LAN-attached printers, specifies the physical attachment of the LAN adapter.

Note: This parameter is used only if ADPTTYPE is *EXTERNAL and ADPTCNNTYPE is *SERIAL.

For ASCII LAN-attached printers, possible values are:

***DIRECT** Specifies EIA-232 direct attachment (XON/XOFF pacing).

***WIRE4** Specifies EIA-232 4-wire attachment (DTR pacing).

FONT Font identifier. Specifies the font identifier used by the printer.

FORMFEED Form feed. Specifies the mode in which forms are fed into the device. Although the host print transform does not use this parameter, the LAN driver program does. Possible values are:

***AUTOCUT** Use this for printers that automatically feed paper into the printer. This would include most laser and ink-jet printers.

***CONT** Use this for printers that use continuous forms. This would include most dot-matrix printers.

ACTTMR Activation timer. Specifies the amount of time (in seconds) to wait for the printer to respond to the activation request from the host system. If the printer does not respond within this time, it is considered not available and a cancel/retry/acquire message is issued to the user.

For example, if the activation timer value is 120 seconds, the writer attempts to lock the adapter every 15 seconds for 120 seconds. After 120 seconds elapses, a cancel/retry message is issued. A cancel reply to the message cancels the writer.

A retry reply causes the writer to attempt to lock the adapter again every 15 seconds for 120 seconds. If the lock attempt fails the cancel/reply message is issued again. If the message is not answered in five minutes, the system automatically attempts to lock the adapter.

There is also an allocate (A) reply which releases the MarkNet XLe from any system. Be careful using this, as it may “steal” the printer while in the middle of another job.

Possible values are:

170 The printer waits 170 seconds. This is the default value.

Activation-timer Specify a number indicating the number of seconds before the device is considered not available. When this number of seconds has elapsed, an inquiry message is issued.

If DEVCLS(*LAN) is specified, valid values range from 1 through 2550.

INACTTMR Inactivity timer. Specifies an inactivity timer (time-out) value. For ASCII LAN-attached printers, this value indicates the amount of time the printer writer keeps a lock on the device before releasing it.

Possible values are:

- *ATTACH

  When the printer is defined as *EXTERNAL, *ATTACH sets *NOMAX as the value for releasing the adapter back to the network. *NOMAX should be used if the printer is attached to a 4033 because the 4033 does not support sharing between systems; however, the MarkNet XLe does support sharing.

  Important:

  Because the MarkNet XLe supports sharing, we recommend you set the INACTTMR value to *SEC15.

- *NOMAX
- *SEC15
- *SEC30
- Inactivity timer. The range to select from is 1 through 30 minutes.

TRANSFORM Host print transform function. The host print transform function value defaults to *YES when the device class (DEVCLS) parameter value is *LAN.

***YES** The printer uses the host print transform function.

***NO** The printer does not use the host print transform function.

MFRTYPMDL Manufacturer type and model. The manufacturer, type, and model for the printer using the host print transform function.

PPRSRC1 Paper source 1. For printers that use the host print transform function, the size of paper in paper source 1.

PPRSRC2 Paper source 2. For printers that use the host print transform function, the size of paper in paper source 2.

ENVELOPE Envelope source. For printers using the host print transform function, the type of envelope in the third paper source.

ASCII899 ASCII code page 899 support. For printers using the host print transform function, if the ASCII code page 899 (symbols) is installed.

1.4.2 Sharing ASCII LAN-Attached Printers via MarkNet XLe

The MarkNet XLe device solves the problem of the IBM 4033 concerning non-volatile memory. This means that it is possible to share the device between multiple hosts.

The activation timer parameter is used to determine how long to retry acquiring the device before issuing a message. The system attempts to acquire the device every 15 seconds until the device is successfully acquired or this timer value has been exceeded. At that point, a message is issued (CPA338A – Not able to

allocate device) and you may either cancel the writer or retry acquiring the device. Unlike the IBM 4033, the MarkNet XLe does not allow you to take the device away from another system. See 1.6.1, “Errors Involving the Communications Link” on page 22 for more details regarding this message.

The inactivity timer parameter specifies the amount of time for the writer to wait before releasing the printer. When there are no more spooled files ready to print, the system will wait the amount of time specified in the inactivity timer and then release the printer so that other systems can use it. The default value for the inactivity timer parameter is *ATTACH which defaults to *NOMAX for *EXTERNAL configurations. With the value set to *NOMAX, the system will not give up the device until the writer is ended.

If you set the inactivity timer parameter to a specific time (such as one minute) the system will wait for that length of time for a spooled file to become ready. If no spooled files become ready during that time period, the system will release the printer but the writer will not end. While the printer is released, it is possible for other systems to acquire the printer and use it to print. If, on the first system, a spooled file becomes ready to print, the system will try to reacquire the device. If the device is not busy, the file will be printed. If the device is busy, the same message will be issued that is issued when starting the writer to a device that is busy allowing you to cancel or retry acquiring the device.

Since the MarkNet XLe does support sharing, we recommend you set this value to *SEC15 for the MarkNet XLe device.

1.5 ASCII Printers Attached via the Integrated Network Option

This topic covers ASCII printers attached to the LAN via the Integrated Network Option (INO). Only IBM/Lexmark printers with a MarkNet or MarkNet XL INO card are supported. Other OEM printers such as HP printers, which have their own internal network adapter card, must be attached via an IBM 4033 or MarkNet XLe device, or must use the TCP/IP support described in 1.8, “Printing to ASCII Printers via TCP/IP” on page 24.

1.5.1 Configuration

To correctly configure descriptions (line, network controller, network device, and printer device) certain parameters on these descriptions must have specific values.

1.5.1.1 Line Description Parameters

All lines must be either token-ring or Ethernet. If Ethernet is used, the Ethernet standard parameter value must be *IEEE8023 or *ALL.

Assuming your line description already exists, use the Change Line Description (Token-Ring) (CHGLINTRN) or Change Line Description (Ethernet) (CHGLINETH) commands to update the SSAP (source service access point) list in the line description.

```
                    Change Line Desc (Token-Ring) (CHGLINTRN)
Type choices, press Enter.
SSAP list:
  Source service access point  .   04            02-FE, *SAME, *SYSGEN
  SSAP maximum frame . . . . . .   *MAXFRAME     *MAXFRAME, 265-16393
  SSAP type  . . . . . . . . . .   *SNA          *CALC, *NONSNA, *SNA, *HPR
  Source service access point  .   06            02-FE
  SSAP maximum frame . . . . . .   *MAXFRAME     *MAXFRAME, 265-16393
  SSAP type  . . . . . . . . . .   *NONSNA       *CALC, *NONSNA, *SNA, *HPR
  Source service access point  .   AA            02-FE
  SSAP maximum frame . . . . . .   *MAXFRAME     *MAXFRAME, 265-16393
  SSAP type  . . . . . . . . . .   *NONSNA       *CALC, *NONSNA, *SNA, *HPR
  Source service access point  .   12            02-FE
  SSAP maximum frame . . . . . .   *MAXFRAME     *MAXFRAME, 265-16393
  SSAP type  . . . . . . . . . .   *NONSNA       *CALC, *NONSNA, *SNA, *HPR
                                                                    More...
F3=Exit   F4=Prompt   F5=Refresh   F12=Cancel   F13=How to use this display
F24=More keys
```

Figure 7. Change Line Description Token-Ring Display

Not all of the parameters that make up the line description are discussed here. Only the parameters required to support ASCII LAN-attached printers are shown.

SSAP Source service access point. For LAN printer applications, specify 12. The AS/400 requires an SSAP value of 12 for ASCII LAN-attached printers.

Notes:

1. If the SSAP of 12 is not added to existing communications lines used for ASCII LAN-attached printers, message `CPI400C - Communication link not started on line` is sent to the message queue with a reason code of 1.
2. When you create a new line description for token-ring or Ethernet, you can specify an SSAP of *SYSGEN. In this case the system generates the source service access points 04, 12, AA and C8.

MAXFRAME SSAP maximum frame. Specifies the maximum SSAP frame size. Specify *MAXFRAME; this will take the value from the Maxframe parameter in this command.

SSAP Type Source service access point type. This value must be *NONSNA. This means SNA communications cannot be used.

1.5.1.2 Network Controller and Network Device Description Parameters

Network controller and network device descriptions are needed to complete the communications connection to the ASCII LAN-attached printer.

If they don't exist, they are created automatically when the STRPRTWTR command is run for an ASCII printer attached to the LAN.

1.5.1.3 Printer Device Description Parameters

An ASCII printer device must be manually configured. The automatic configuration does not support configuration of ASCII LAN-attached printers. The Create Device Description (Printer) (CRTDEVPRT) command must be used.

```
                    Create Device Desc (Printer) (CRTDEVPRT)
Type choices, press Enter.
Device description . . . . . . . DEVD         > LAN4039
Device class . . . . . . . . . . DEVCLS       > *LAN
Device type  . . . . . . . . . . TYPE         > 3812
Device model . . . . . . . . . . MODEL        > 1
Switched line list . . . . . . . SWTLINLST      ITSCTRN
                          + for more values
LAN remote adapter address . . . ADPTADR        10005A100014
Adapter type . . . . . . . . . . ADPTTYPE       *INTERNAL
........... . . . . . . . . . . ....           .....
Font:                            FONT
  Identifier . . . . . . . . . .                11
  Point size . . . . . . . . . .                *NONE
Form feed  . . . . . . . . . . . FORMFEED       *AUTOCUT
........... . . . . . . . . . . ....           .....
Activation timer . . . . . . . . ACTTMR         170
Inactivity timer . . . . . . . . INACTTMR       *SEC15
........... . . . . . . . . . . ....           .....
Host print transform . . . . . . TRANSFORM      *YES
Manufacturer type and model  . . MFRTYPMDL      *IBM4039HP
Paper source 1 . . . . . . . . . PPRSRC1        *MFRTYPMDL
Paper source 2 . . . . . . . . . PPRSRC2        *MFRTYPMDL
Envelope source  . . . . . . . . ENVELOPE       *MFRTYPMDL
ASCII code page 899 support  . . ASCII899       *NO
........... . . . . . . . . . . ....           .....

                                                                   More...
F3=Exit   F4=Prompt   F5=Refresh   F12=Cancel   F13=How to use this display
F24=More keys
```

Figure 8. Create Device Description Printer Display

Not all of the parameters that make up the printer device description are discussed here. Only the parameters required to support ASCII LAN-attached printers are shown.

DEVD Device description. Specifies the name of the device description.

DEVCLS Device class. Specifies the device class for the printer. This value must be *LAN and it indicates the ASCII printer is connected to a local area network (LAN).

TYPE Device type. Specifies the type of printer this device configuration represents. As IBM 3812 emulation is used, enter 3812.

MODEL Device model. Specifies the model number of the device. As IBM 3812 Model 1 emulation is used, enter 1.

SWTLINLST Switched line list. Specifies the name of the switched communication lines to which the printer is associated when DEVCLS(*LAN) is specified. A maximum of eight switched communications lines can be specified.

ADPTADR LAN remote adapter address (printer address). Specifies the 12-character hexadecimal LAN address of the ASCII printer when DEVCLS(*LAN) is specified. Valid values range from 000000000001 through FFFFFFFFFFFE. This address is available with the LAN adapter.

Note: The address for a 4039 printer with an INO card can be found using the printer's operator panel.

Tip:

For the Integrated Network Option the first eight characters are usually 10005A10xxxx.

ADPTTYPE Adapter type. Specifies the type of LAN printer to be used when DEVCLS(*LAN) is specified. As the printer has an internal LAN adapter (INO card), specify *INTERNAL for this parameter.

FONT Font identifier. Specifies the font identifier used by the printer.

FORMFEED Form feed. Specifies the mode in which forms are fed into the device. Although the host print transform does not use this parameter, the LAN driver program does. Possible values are:

***AUTOCUT** Use this for printers that automatically feed paper into the printer. This would include most laser and ink-jet printers.

***CONT** Use this for printers that use continuous forms. This would include most dot-matrix printers.

ACTTMR Activation timer. Specifies the amount of time (in seconds) to wait for the printer to respond to the activation request from the host system. If the printer does not respond within this time, it is considered not available and a cancel/retry/acquire message is issued to the user.

For example, if the activation timer value is 120 seconds, the writer attempts to lock the adapter every 15 seconds for 120 seconds. After 120 seconds elapses, a cancel/retry message is issued. A cancel reply to the message cancels the writer.

A retry reply causes the writer to attempt to lock the adapter again every 15 seconds for 120 seconds. If the lock attempt fails the cancel/reply message is issued again. If the message is not answered in five minutes, the system automatically attempts to lock the adapter.

If the message is not answered in five minutes, the system automatically attempts to lock the adapter.

There is also an allocate (A) reply which releases the printer from any system. Before selecting the A reply for a printer with an INO, the printer must be powered off and back on.

Possible values are:

170 The printer waits 170 seconds. This is the default value.

Activation-timer Specify a number indicating the number of seconds before the device is considered not available. When this number of seconds has elapsed, an inquiry message is issued.

If DEVCLS(*LAN) is specified, valid values range from 1 through 2550.

INACTTMR Inactivity timer. Specifies an inactivity timer (time-out) value. For ASCII LAN-attached printers, this value indicates the amount of time the printer writer keeps a lock on the device before releasing it.

Possible values are:

- *ATTACH

  If the printer has an INO card, 15 seconds must pass before releasing the adapter back to the network.
- *NOMAX
- *SEC15
- *SEC30
- Inactivity timer. The range to select from is 1 through 30 minutes.

TRANSFORM Host print transform function. The host print transform function value defaults to *YES if the device class (DEVCLS) parameter value is *LAN.

***YES** The printer uses the host print transform function.

***NO** The printer does not use the host print transform function.

MFRTYPMDL Manufacturer type and model. The manufacturer, type, and model for the printer using the host print transform function.

PPRSRC1 Paper source 1. For printers that use the host print transform function, the size of paper in paper source 1.

PPRSRC2 Paper source 2. For printers that use the host print transform function, the size of paper in paper source 2.

ENVELOPE Envelope source. For printers using the host print transform function, the type of envelope in the third paper source.

ASCII899 ASCII code page 899 support. For printers using the host print transform function, if the ASCII code page 899 (symbols) is installed.

1.5.2 Sharing ASCII LAN-Attached Printers via INO

Because of the limitations of the 4033 LAN Connection product, we recommend that you use a printer with a Lexmark MarkNet or MarkNet XL INO, or a MarkNet XLe device, when you need to share the printer between systems. Sharing of printers with the INO card is supported by utilizing the activation timer and inactivity timer parameters of the device description.

The activation timer parameter is used to determine how long to retry acquiring the device before issuing a message. The system attempts to acquire the device every 15 seconds until the device is successfully acquired or this timer value has been exceeded. At that point, a message is issued and you may either cancel the writer, retry acquiring the device, or take the device away from the other

system. See 1.6.1, “Errors Involving the Communications Link” on page 22 for more details regarding this message.

The inactivity timer parameter specifies the amount of time for the writer to wait before releasing the printer. When there are no more spooled files ready to print, the system will wait the amount of time specified in the inactivity timer and then release the printer so that other systems can use it. The default for this parameter is *ATTACH, which for printers using the INO gives the inactivity timer a value of 15 seconds. If you set the inactivity timer parameter to a specific value like one minute, or you let it default to 15 seconds, the system will wait for that length of time for a spooled file to become ready. If no spooled files become ready during that time period, the system will release the printer but the writer will not end. While the printer is released, it is possible for other systems to acquire the printer and use it to print. If, on the first system, a spooled file becomes ready to print, the system will try to reacquire the device. If the device is not busy, the file will be printed. If the device is busy, the same message will be issued that is issued when starting the writer to a device that is busy allowing you to cancel or retry acquiring the device.

If you specify *NOMAX for the inactivity timer, the printer will not be released until the writer is ended. This is the value to use if you are not going to be sharing the printer.

Note: Some printers, like the IBM 4039, have their own set of time-out parameters which can be used to switch the printer between different hosts. In order for the AS/400 inactivity timer to work properly these parameters should be disabled or made as large as possible. For instance, on the 4039, the value for End-of-Job Timeout should be set to 255 to minimize the chance that the printer will terminate the session with the AS/400 when the AS/400 stops sending data to the printer for that period of time. This can lead to a problem on the AS/400 if an error such as end of forms occurs on the printer and the message isn’t responded to before the printer ends the session. When the error is finally responded to on the AS/400, there is no longer a session and the writer will end.

1.6 Error Recovery for ASCII LAN-Attached Printers

When dealing with LAN attached ASCII printers, there are basically two types of errors which you may get. One is an error which involves the communications link to the printer; the second include the usual operator intervention errors that occur when the file is printing, such as out of paper or paper jam.

1.6.1 Errors Involving the Communications Link

Communications link problems usually result in an informational message being sent to the message queue indicated in your STRPRTWTR command followed by an inquiry message.

The informational messages indicate that the communications link could not be started or that the printer could not be contacted. In addition, the messages have reason codes that help you figure out what may have gone wrong. They also have suggested actions that you can take in order to fix the problem.

The inquiry messages allow you to retry the operation or cancel the writer.

CPA3387 - Device not available is typically the inquiry message that is issued when the writer is having a problem communicating with the printer. This would indicate that the AS/400 cannot “find” the printer on the LAN. Check the following items:

- Is the printer and/or 4033 powered on?
- Are all LAN cables correctly seated?
- Do the network addresses match between the actual device and the AS/400 device description?
- For token-ring, is the correct ring speed configured?
- For the INO, is the option enabled?
- If the device is connected via a bridge, is the bridge operational?

If the device is currently locked by another system, message CPA338A - Not able to allocate device will be issued. CPA338A allows the cancel and retry options but also has an additional reply (A) which can be used to obtain the device from the other system. If the adapter type is *INTERNAL, the printer will have to be powered off and then back on before entering the A reply. The MarkNet XLe does not support the A reply. You should check the device before using this reply to make sure that the system that has the device locked is done printing or you could cause the other system to prematurely quit printing.

1.6.2 Operator Intervention Errors

When printing to LAN ASCII printers, operator intervention errors such as out of paper or paper jam are normally mapped to the inquiry message CPA403D - Operator action required on device, which indicates operator intervention is required. This is because it is not always possible for the driver program to determine the exact cause of the error. When CPA403D is received, you must check the printer to determine the exact cause of the error. Once you have corrected the problem, reply with an R to continue printing.

Because printers have internal data buffers, sometimes you will not be notified of an error immediately when the error occurs. The system may not know about the error until it tries to send the next spooled file to the printer. At that time, you will be notified of the error so that you can fix the problem at the printer. When the problem is fixed, the file that was printing when the error occurred will finish printing followed by the new file.

1.7 Restrictions when Using ASCII LAN-Attached Printers

The following list contains restrictions when using ASCII LAN-attached printers:

- All ASCII printers must be attached to the Lexmark 4033 LAN Connection, the MarkNet XLe, or the printer must have a Lexmark MarkNet or MarkNet XL INO card.
- Only spooled files with device type attributes of *SCS or *USERASCII are supported. Spooled files of type other than *SCS or *USERASCII that reach an output queue associated with a ASCII LAN-attached printer are held. A message indicating the spooled file is held is sent to the message queue specified on the STRPRTWTR command.
- Direct printing (SPOOL parameter value = *NO on the CRTPRTF, CHGPRTF, and OVRPRTF commands) is not supported with ASCII LAN-attached printers.
- Printer sharing through the allow direct print (ALWDRTPRT) parameter on the STRPRTWTR command is not supported. This type of printer sharing

requires having the SPOOL parameter value set to *NO on the CRTPRTF command and the ALWDRTPRT parameter value set to *YES on the STRPRTWTR command.

- Only token-ring or Ethernet communications lines (values in the Switched Line List (SWTLINLST) parameter of the printer device description) are supported.

1.8 Printing to ASCII Printers via TCP/IP

Important!

At the time this manual was published printing via TCP/IP directly to LAN-attached printers was not officially supported.

It is possible to print via TCP/IP using the Integrated Network Option and MarkNet XLe from the AS/400. You can also print to other printers which support TCP/IP, for example those using the Hewlett-Packard JetDirect interface. This method provides similar function to the configurations described above, but no printer device description is created on the AS/400. The printer is accessed either by its Internet address or a configured host name.

Flash microcode release 40 of the INO added support for the TCP/IP Line Printer Daemon (LPD) function. This allows you to access the printer directly using the Line Printer Requester (LPR) function of AS/400. The MarkNet XLe supports LPD with no flash upgrade. Previously, printing was done via the relatively inconvenient File Transfer Protocol (FTP) function.

For more information about LPR/LPD see *AS/400 Printing III*, GG24-4028. For more information about configuring the INO and MarkNet XLe for TCP/IP see *Network Printer Utility Guide*, SA40-0822.

1.8.1 Acquiring INO and MarkNet XLe Flash Microcode

INO and MarkNet XLe flash microcode is available from the following sources:

Internet	ftp.lexmark.com
Lexmark BBS	(606) 232-5238
Lexmark Technical Support	(606) 232-5238

Follow the instructions found in the README file on downloading the new flash code to the device. We used the OS/2 Network Printer Utility to perform this task.

Important!

Do *not* turn off the printer or device while the flash update is taking place. Damage to the device can result.

1.8.2 Configuring TCP/IP

Hint:

Printing the setup page is an easy way to verify the status of the INO and MarkNet XLe, as well as the Hewlett-Packard JetDirect device. The INO setup page is printed via the Printer Operator Panel. The MarkNet XLe setup page can be printed as follows:

1. Remove the adapter's switch cover.
2. Press the Test button until its light turns on. At that point release the button.
3. Replace the cover switch.

Configuration of the INO and MarkNet XLe for TCP/IP can be done in several ways:

- Using the Printer Operator Panel (INO and Hewlett-Packard JetDirect only).
- Using a Bootstrap Protocol (BOOTP).
- Using the Lexmark Network Printer Utilities for TCP/IP.
- Using a Remote Address Resolution Protocol (RARP) server (MarkNet XLe and Hewlett-Packard JetDirect only). RARP is not supported on the AS/400.
- Modifying the Address Resolution Protocol (ARP) table (MarkNet XLe only). ARP is not supported on the AS/400.

For more information on configuring the INO and MarkNet XLe for TCP/IP see *Network Printer Utility Guide*, SA40-0822.

1.8.2.1 Configuration via TELNET (MarkNet XLe and Hewlett-Packard JetDirect Only)

Once you have successfully configured the MarkNet XLe you can perform further configuration using TELNET from the AS/400. Hewlett-Packard JetDirect uses the default port of 23; however, you must specify a port number of 9000 to access this function for MarkNet XLe as shown in Figure 9:

```
                          Start TCP/IP TELNET (TELNET)

 Type choices, press Enter.

 Remote system  . . . . . . . . . > *INTNETADR

 Internet address . . . . . . . .   9.5.69.100

                            Additional Parameters

 Port . . . . . . . . . . . . . . > 9000          1-65534, *DFT

                                                                        Bottom
 F3=Exit   F4=Prompt   F5=Refresh   F10=Additional parameters   F12=Cancel
 F13=How to use this display        F24=More keys
```

Figure 9. Configuring MarkNet XLe via TELNET

Note: If the printer was defined in the host table, or on a remote name server, you could specify that name in the Remote system field instead of *INTNETADR.

When the TELNET connection has been successfully made to the MarkNet XLe you will see the screen shown in Figure 10 on page 26:

```
************************************************************

This session allows you to set the TCPIP parameters for your
Lexmark MarkNet XLe 201 external network device,
with a hardware address of 10005a1095a2
It's a Token-Ring adapter.

************************************************************


MAIN MENU
  1. Set address, netmask, gateway
  2. Set community name
  3. Set password
  4. Set lpd options
  5. Manage lpd queue names
  6. Configure IBM 4029 lpd queues
  7. Enable/Disable BOOTP and RARP
  8. Disable/Enable FTP and TFTP
  9. Set parallel port parameters
  q. quit
Selection:
```

Figure 10. Configuring MarkNet XLe via TELNET

1.8.3 Printing via TCP/IP

Once the necessary configuration is complete, printing is identical for the INO and the MarkNet XLe except for the name of the print queue used. For the INO you should always use a print queue name of /prt0.

The following list shows what print queue names should be used for the different ports on the MarkNet XLe:

Queue Name	Port
/prt1	Parallel 1
/prt2	Parallel 2
/prt9 or /ser	Serial

For the Hewlett-Packard JetDirect use the following queue names:

Queue Name	Meaning
text	Unformatted text (for example, CONFIG.SYS)
raw	Formatted text (for example, PostScript**, PCL, etc.)

We will discuss two ways to print: using FTP and LPR. The latter is much more flexible and powerful, and can be automated with the Remote System Printing function described in Chapter 2, “Remote System Printing” on page 31.

1.8.3.1 Using FTP

File Transfer Protocol (FTP) is the TCP/IP method of copying data files from one machine to another. Since the INO and MarkNet XLe both support FTP, you can link to them from other platforms and “put” data on the device. This results in a printout of the data.

Using FTP we can print AS/400 file members and ASCII files found within the Integrated File System (IFS).

Important!

Spooled files cannot be printed directly via FTP.

One area to watch out for is the naming convention used. AS/400 FTP has a command called **namefmt**, which tells the AS/400 how the file and underlying directory structures will be specified. The following values can be specified for namefmt:

0 A naming format only for library file system database files. This format was available prior to Version 3.0 Release 1.0. The general format is:

`libname/filename.mbrname`

This is the default.

1 A naming format for both hierarchical file systems and the library file system. This format must be used to work with the hierarchical file systems such as optical. This naming format is available with Version 3.0 Release 1.0. Library file system files in this naming format are:

`/QSYS.LIB/libname.LIB/filename.FILE/mbrname.MBR`

The document library services, an IFS file system, has the following format:

`/QDLS/libname/filename.ext`

Note: Issuing the namefmt command with no parameters results in the current setting displayed.

An FTP session can be invoked on the AS/400 as shown in Figure 11:

```
                        Start TCP/IP File Transfer (FTP)

Type choices, press Enter.

Remote system  . . . . . . . . . > *INTNETADR

Internet address . . . . . . . . > '9.5.69.100'
Coded character set identifier     *DFT          1-65533, *DFT

                                                                        Bottom
F3=Exit   F4=Prompt   F5=Refresh   F10=Additional parameters   F12=Cancel
F13=How to use this display        F24=More keys
```

Figure 11. Start TCP/IP File Transfer (FTP)

If the connection is successful an interactive session is started, as shown in Figure 12 on page 28. The **>** character indicates that we should input a request.

1 The type and model number of the device is reported.

2 Log in.

3 Issue the put command. Since we did not issue the namefmt command, the default value of 0 is used.

4 Set the naming format to 1, which indicates that the Integrated File System (IFS) naming convention will be used.

5 Do the actual put. Notice how we address the same file member using this naming format.

```
                         File Transfer Protocol

Previous FTP subcommands and messages:
  Connecting to host name LANPRINT at address 9.5.69.100 using port 21.
  220 FTP server: Lexmark MarkNet XLe 201 ready 1
  502 SYST command not implemented
> qsecofr 2
  230 user qsecofr logged in
> put qgpl/qrpgsrc.proof /prt1 3
  200 PORT Command successful
  150 Opening data connection
  226 Transfer complete
  959 bytes transferred in 0.158 seconds. Transfer rate 6.062 KB/sec.
> namefmt 1 4
  502 SITE command not implemented
  Client NAMEFMT is 1.
> put /qsys.lib/qgpl.lib/qrpgsrc.file/proof.mbr /prt1 5
  200 PORT Command successful
  150 Opening data connection
  226 Transfer complete
  959 bytes transferred in 0.195 seconds. Transfer rate 4.910 KB/sec.


Enter an FTP subcommand.
===>

F3=Exit     F6=Print       F9=Retrieve
F17=Top    F18=Bottom    F21=CL command line
```

Figure 12. Printing AS/400 Source File Member via FTP

Printing a PC file can also be done, as shown in Figure 13 on page 29. After signing on we must take the following steps:

1 Set transfer type to binary, since we are printing an ASCII file to an ASCII printer and require no conversions.

2 Set the naming format to 1, which indicates that the Integrated File System (IFS) naming convention will be used.

3 Do the actual put.

```
                          File Transfer Protocol

 Previous FTP subcommands and messages:
   Connecting to host name LANPRINT at address 9.5.69.100 using port 21.
   220 FTP server: Lexmark MarkNet XLe 201 ready
   502 SYST command not implemented
 > qsecofr
   230 user qsecofr logged in
 > binary 1
   200 TYPE Command successful
 > namefmt 1 2
   502 SITE command not implemented
   Client NAMEFMT is 1.
 > put /qdls/glms/junk.txt /prt0 3
   200 PORT Command successful
   150 Opening data connection
   226 Transfer complete
   68 bytes transferred in 0.135 seconds. Transfer rate 0.505 KB/sec.


 Enter an FTP subcommand.
 ===>

 F3=Exit     F6=Print       F9=Retrieve
 F17=Top    F18=Bottom    F21=CL command line
```

Figure 13. Printing AS/400 ASCII File via FTP

1.8.3.2 Using LPR

As we saw in 1.8.3.1, “Using FTP” on page 27 printing can be done via FTP, but it requires us to manually print each item and does not support the printing of spooled files. The LPR command is more flexible, and can be automated with the remote system print function.

In Figure 14 on page 30 we show an example of printing to a Hewlett-Packard 4si using LPD. Note that we are using the host print transform function to convert the data to PCL, and are therefore using the *raw* queue:

```
                         Send TCP/IP Spooled File (LPR)

 Type choices, press Enter.

 Remote system  . . . . . . . . . > HP4

 Printer queue  . . . . . . . . . > 'raw'

 Spooled file . . . . . . . . . . > QSYSPRT       Name
 Job name . . . . . . . . . . . . .  *            Name, *
   User . . . . . . . . . . . . . .                Name
   Number . . . . . . . . . . . . .                000000-999999
 Spooled file number  . . . . . . .  *ONLY        1-9999, *ONLY, *LAST
 Destination type . . . . . . . . .  *OTHER       *AS400, *PSF2, *OTHER
 Transform SCS to ASCII . . . . . .  *YES         *YES, *NO
 Manufacturer type and model  . . > *HP4

                                                                     Bottom
F3=Exit   F4=Prompt   F5=Refresh   F10=Additional parameters   F12=Cancel
F13=How to use this display        F24=More keys
```

Figure 14. Printing AS/400 Spooled Files via LPR

The screen shown in Figure 15 shows how we could automate the sending of AS/400 spooled files across TCP/IP to a printer attached to the LAN via a MarkNet XLe. Note that this example prints to parallel port 2, as we are using /prt2:

```
                         Create Output Queue (CRTOUTQ)

 Type choices, press Enter.

 Output queue . . . . . . . . . . > MARKNETXLE    Name
   Library  . . . . . . . . . . .    *CURLIB     Name, *CURLIB
 Maximum spooled file size:
   Number of pages  . . . . . . .  *NONE         Number, *NONE
   Starting time  . . . . . . . .                Time
   Ending time  . . . . . . . . .                Time
                + for more values
 Order of files on queue  . . . .  *FIFO         *FIFO, *JOBNBR
 Remote system  . . . . . . . . . > *INTNETADR
 Remote printer queue . . . . . . > '/prt2'
 Writers to autostart . . . . . . > 1            1-10, *NONE
 Queue for writer messages  . . .  QSYSOPR       Name
   Library  . . . . . . . . . . .    *LIBL       Name, *LIBL, *CURLIB
 Connection type  . . . . . . . . > *IP          *SNA, *IP
 Destination type . . . . . . . .  *OTHER        *OS400, *OS400V2, *PSF...
 Transform SCS to ASCII . . . . .  *YES          *YES, *NO
 Manufacturer type and model  . . > *HP4
 Internet address . . . . . . . . > '9.5.69.100'
 Destination options  . . . . . .  *NONE
 Text 'description' . . . . . . . > 'TCP/IP Remote Prt to MarkNet XLe'

                                                                     Bottom
F3=Exit   F4=Prompt   F5=Refresh   F10=Additional parameters   F12=Cancel
F13=How to use this display        F24=More keys
```

Figure 15. Automated Printing of AS/400 Spooled Files via LPR

Chapter 2. Remote System Printing

Since the early days of the System/38* many customers have been asking for a way to automatically route output back to their local printer, when they are passed through from their local system to another system. This function became known as **Printer Pass-through**. In Version 3.0 Release 1.0 **Remote System Printing** provides this in addition to many other important new functions.

The Remote System Printing function allows spooled files created on a Version 3.0 Release 1.0 AS/400 to be automatically sent to another system for printing. The target system does not have to be another AS/400, but can be any system which supports SNA Distribution Services (SNADS) or the TCP/IP communications protocol.

The source system must be an AS/400 running Version 3.0 Release 1.0.

In this chapter we will discuss the following:

- The general concepts of remote system printing
- New and changed CL commands
- General configuration details
- Examples of configurations and operational considerations when sending a spooled file to:
  - Another AS/400 running Version 3.0 Release 1.0
  - Another AS/400 running Version 2
  - A System/390*
  - A system running PSF/2
  - A system running PSF/6000*
- User Print Information
- The use of User Print Information with the VM/MVS Bridge Outbound Exit Point
- Troubleshooting

2.1 Introduction to Remote System Printing

The remote printing function is particularly useful for customers who have networked systems, and need to pass-through to other systems using display station pass-through, 3270 emulation, or TELNET. Until now there has been no support in the OS/400 operating system for automatically routing a spooled file to a printer connected to another system.

The function uses either the SNDNETSPLF or the SNDTCPSPLF (LPR) commands. Both of these commands were available previously, but they can now be issued automatically without the need for the user to invoke the command manually. Version 3.0 Release 1.0 provides two commands to allow you to define a remote output queue.

New parameters are provided with the CRTOUTQ command which can define the output queue as remote. In addition a new command, the start remote writer

(STRRMTWTR) command, works in conjunction with the new parameters defined for the remote output queue to send the spooled files on that queue to the remote system, using either TCP/IP or SNA.

Full details of the parameters for the CRTOUTQ and STRRMTWTR commands are described in detail in the manual *AS/400 Printer Device Programming - Version 3*, SC41-3713. In this chapter we will concentrate on how to define remote printing from an Version 3.0 Release 1.0 system to a variety of other systems, and the capabilities and restrictions which apply for each example.

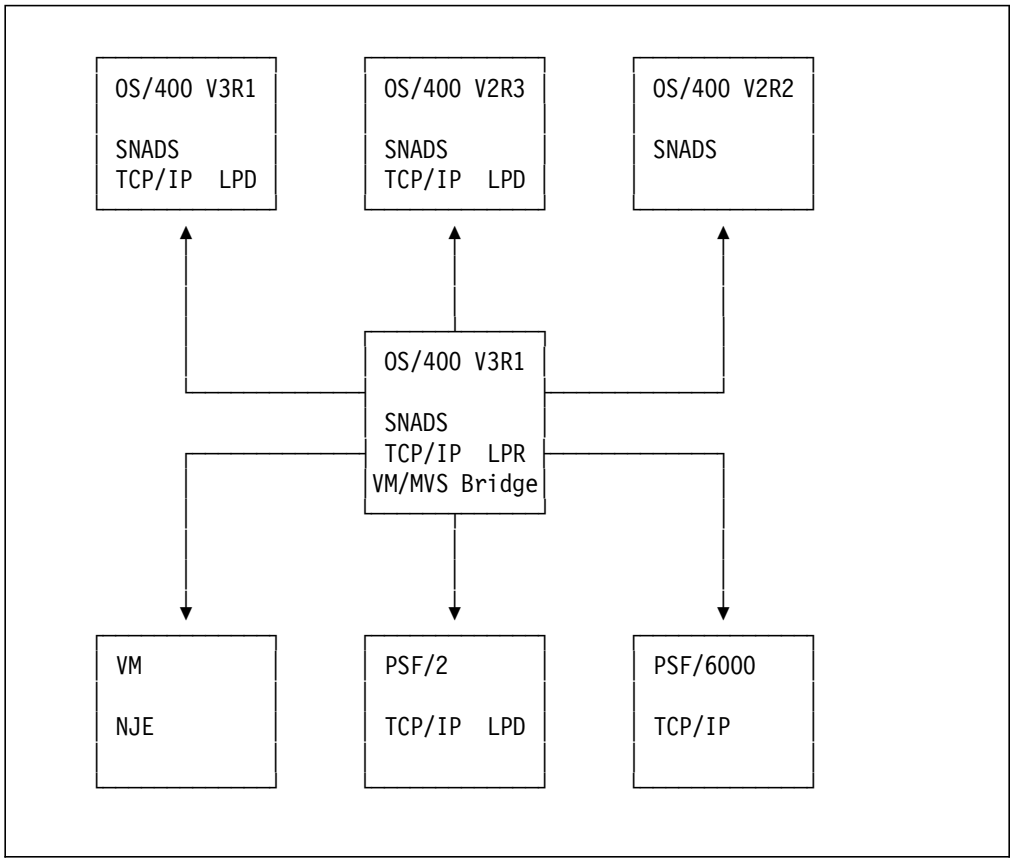

Figure 16. Token-Ring Network Used when Writing this Chapter

Figure 16 shows a simplified diagram of the network which was used to produce the examples contained in this publication. Only those functions relevant to the remote printing function have been shown for each of the systems.

Figure 17 on page 33 shows an outline of the processes involved in printing to a remote system from an AS/400. The AS/400 output queue **2** shown in the diagram is defined as a remote output queue on AS/400 **1**, which must be running Version 3.0 Release 1.0. New parameters on the CRTOUTQ command are used to create this remote output queue. When the STRRMTWTR command is issued, any spooled files in the remote output queue will automatically be sent to the remote system. If the destination system is an AS/400, the spooled file will be sent to output queue **3**, which is determined by the RMTPRTQ parameter on the CRTOUTQ command. If the destination system is VM or MVS, the RMTPRTQ parameter will determine if the spooled file is sent to the system printer, a user ID, or remote printer **4**. If the destination system is PSF/2 the spooled file will be sent to print queue **5**, which is determined by the RMTPRTQ parameter on the CRTOUTQ command.

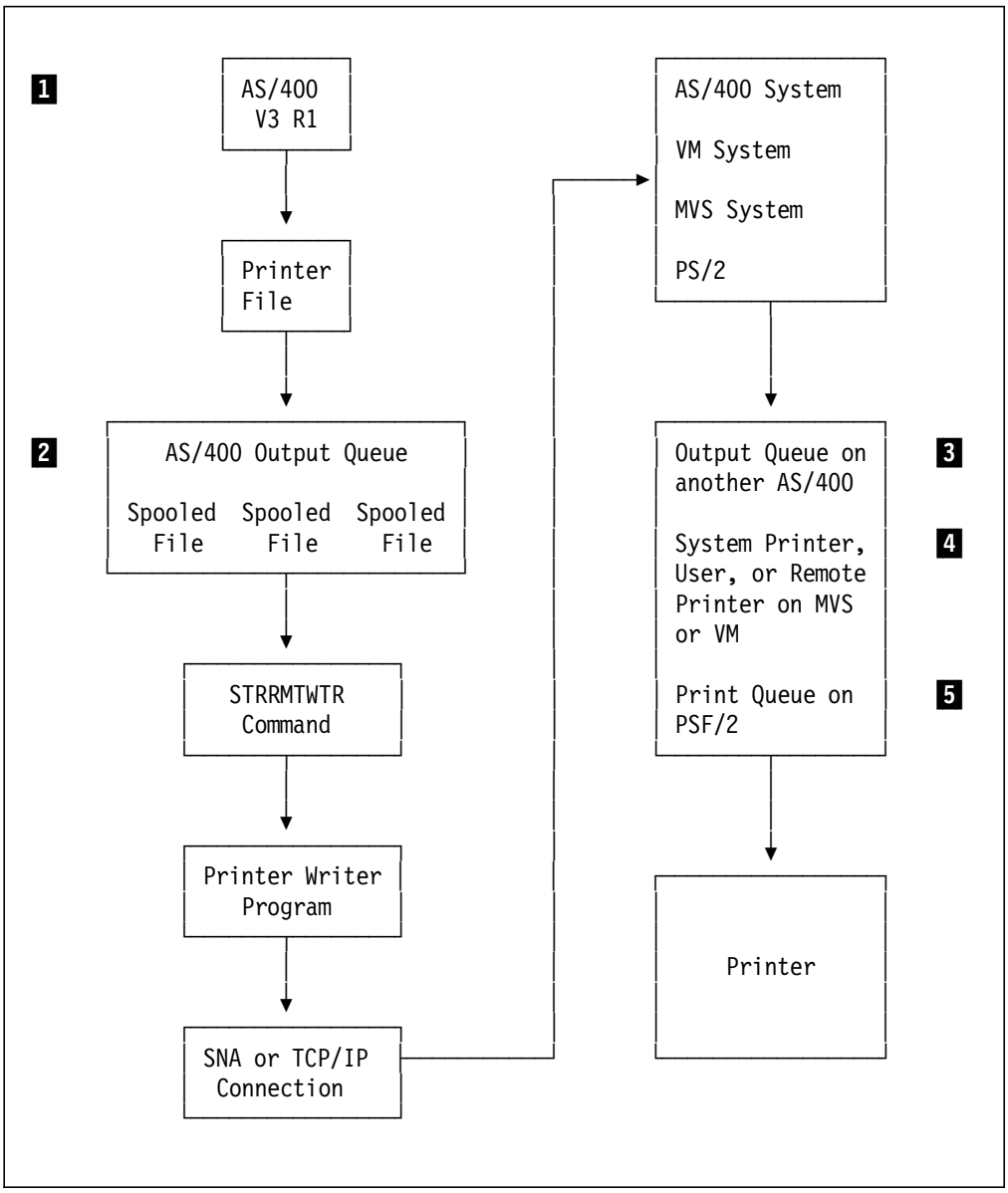

Figure 17. Overview of the Remote Printer Function

2.2 New and Changed CL Commands for Remote System Printing

There are several new CL commands associated with remote system printing, as well as new parameters on existing commands. In this section we will introduce these changes, which will be explained in detail later in the chapter.

The CL commands associated with remote system printing are as follows:

- CRTOUTQ - Create Output Queue (new parameters)
- CHGOUTQ - Change Output Queue (new parameters)

  The CRTOUTQ and CHGOUTQ commands have new parameters associated with remote printing. These new parameters will be discussed in much more detail when we consider sending spooled files to various types of remote systems. In addition, full details can be found in the manual *AS/400 Printer Device Programming - Version 3*, SC41-3713.

Hint:

We create the output queue in library QUSRSYS so that, if necessary, we could create a "dummy" virtual printer later. See 2.10.8, "Remote Printing from OfficeVision/400" on page 88 for more information.

- STRRMTWTR - Start Remote Writer (new command)

  This new command will be discussed in detail when we consider sending spooled files to various types of remote systems. In addition, full details can be found in the manual *AS/400 Printer Device Programming - Version 3*, SC41-3713.

- CHGUSRPRTI - Change User Print Information (new command)
- DSPUSRPRTI - Display User Print Information (new command)
- RTVUSRPRTI - Retrieve User Print Information (new command)

  The ability to specify user print information is a new function of Version 3.0 Release 1.0 and is discussed in detail in 2.8.7, "User Print Information" on page 77.

- ADDEXITPGM - Add Exit Program (new command)

  The ability to change NJE header and trailer information when sending a spooled file to VM or MVS is a new function of Version 3.0 Release 1.0. A user exit point is defined with the VM/MVS Bridge which can be configured to call a user-specified program.

  This new command configures the exit point to call your program whenever a file is to be sent to a VM or MVS system. The command and how to use it are discussed in 2.9, "Using the VM/MVS Bridge Outbound Exit Point with Remote Printing" on page 78.

2.3 Configurations

The communications protocols used to support the remote printing function can be either SNADS or TCP/IP. The target system can be:

- Another AS/400 running Version 3.0 Release 1.0
- Another AS/400 running Version 2
- A System/390 running MVS or VM
- A PS/2 running PSF/2
- Another type of system

Not all the combinations of destination system (DESTTYPE parameter) and communications protocol (CNNTYPE parameter) can be used for remote printing. Table 1 shows which combinations are valid and which are not.

Table 1. Valid Combinations of CNNTYPE and DESTTYPE

Connection Type	**Destination Type**				
	***OS400**	***OS400V2**	***S390**	***PSF2**	***OTHER**
*SNA	Yes	Yes	Yes	No	Yes
*IP	Yes	No	No	Yes	Yes

The values for the destination type, and the circumstances in which they should be used, are discussed in more detail in the list which follows:

***OS400** Both systems are AS/400s running Version 3.0 Release 1.0 and the spooled file can be sent using either SNA or TCP/IP. All AS/400 print data streams are supported. The target output queue can be the default for the user, the default for the system, or specified by name.

All spooled file attributes are preserved when sending from one AS/400 to another regardless of whether the communication is handled by SNA or TCP/IP.

When sending to another AS/400 using SNA communications, the SNDNETSPLF command is automatically invoked and the data format will be set to *ALLDATA.

When sending to another AS/400 using TCP/IP communications, the SNDTCPSPLF (LPR) command is automatically invoked with a destination type of *OS400. AS/400 implementation specific extensions to the LPR command are used to retain all the attributes of the original spooled file.

Important:

Unlike the LPR command, no parameter is available to specify that the spooled file should be saved on the source system when using remote system printing. If do not want the spooled file deleted from the source AS/400 ensure that the SAVE spooled file attribute is set to *YES.

Sending from one AS/400 running Version 3.0 Release 1.0 to another is discussed in more detail in 2.4, “V3R1 OS/400 to V3R1 OS/400” on page 36.

Note: If the target AS/400 is running Version 2.0 Release 3.0, with the IBM TCP/IP Connectivity Utilities/400 Version 2 (5738-TC1) installed, *and* TCP/IP is specified as the connection type in the CRTOUTQ command, then *OS400 should be used for the destination type. Version 2.0 Release 3.0 introduced the capability to send spooled files to another system using TCP/IP. This function was not available in other releases of OS/400 Version 2.

***OS400V2** Both systems are AS/400s, but the target system is running Version 2 of the operating system. In this case the target system does not support the LPR/LPD functions of TCP/IP, and that protocol cannot be used for remote printing.

Note: The exception to this rule is if the target AS/400 is running Version 2.0 Release 3.0 and has IBM TCP/IP Connectivity Utilities/400 Version 2 (5738-TC1) installed. Under these circumstances the destination type should be *OS400. Refer to 2.4, “V3R1 OS/400 to V3R1 OS/400” on page 36 for further explanation.

When sending to another AS/400 using SNA communications, the SNDNETSPLF command is automatically invoked and the data format will be set to *ALLDATA. With this parameter value all the spooled file attributes supported in Version 2 will be preserved, and the file

will print on the target system just as it would have done on the source system.

New spooled file attributes, such as user print information, will not be preserved, as there is no corresponding attribute in the Version 2 operating system. Refer to 2.5, “V3R1 OS/400 to V2 OS/400” on page 48 for a more detailed explanation of how to set up the definitions, and the restrictions which apply when sending spooled files to another AS/400 running Version 2 of the OS/400 operating system.

***S390** The spooled file will be sent to a System/390. The communications protocol must be SNA, and the AS/400 must have the IBM Communications Utilities/400 Version 3 (5763-CM1) licensed program installed. TCP/IP is not supported. The data stream cannot be *USERASCII. Refer to 2.6, “V3R1 OS/400 to System/390” on page 57 for a more detailed explanation of how to set up the definitions, and the restrictions which apply when using this destination type.

***PSF2** The spooled file will be sent to PSF/2 using TCP/IP. SNA communication cannot be used, nor can the data stream be *IPDS. However, sending an *IPDS spooled file to PSF/2 can be accomplished using the Distributed Print Function of PSF/2 (DPF). More information about how to use this function can be found in *AS/400 Printing III*, GG24-4028. Refer to 2.7, “V3R1 OS/400 to PSF/2” on page 64 for a more detailed explanation of how to set up the definitions, and the restrictions which apply when using this destination type.

***OTHER** This destination type is used when the target system is not one of those specified using one of the previously listed values. The communications protocols and data streams which may be sent to the target system will vary depending upon the support provided on that system. In 2.8, “V3R1 OS/400 to PSF/6000” on page 70 we consider one use of this value, where the target system is an IBM RISC System/6000 running the IBM AIX Print Services Facility/6000 licensed program.

2.4 V3R1 OS/400 to V3R1 OS/400

Table 2 on page 37 outlines the possible combinations for four of the parameters used in the CRTOUTQ command to establish a remote printing connection to another AS/400 running Version 3.0 Release 1.0. Following the table we will discuss the various setup options which are valid, and the restrictions which apply.

Table 2. Valid and Invalid Configurations for Sending from V3R1 OS/400 to V3R1 OS/400

Data Stream Type	Destination Type	Connection Type	Transform	Comments
*SCS	*OS400	*SNA	Not permitted	Supported
*IPDS	*OS400	*SNA	Not permitted	Supported
*AFPDS	*OS400	*SNA	Not permitted	Supported - Note 1
*USERASCII	*OS400	*SNA	Not permitted	Supported
*SCS	*OS400	*IP	*YES or *NO	Supported - Note 2
*IPDS	*OS400	*IP	*YES or *NO	Supported - Notes 2 and 3
*AFPDS	*OS400	*IP	*YES or *NO	Supported - Notes 1, 2 and 3
*USERASCII	*OS400	*IP	*YES or *NO	Supported - Notes 2 and 3

Note:

1. If the AFPDS spooled file uses any resources, such as overlays, page segments or host resident fonts, these resources must exist on the target system if they are to be included in the printed output. The AS/400 does not insert resources in the spooled file before sending the file to the target system.
2. A destination type of *OS400 together with a connection type of *IP is also supported when the target system is running Version 2.0 Release 3.0 and the IBM TCP/IP Connectivity Utilities/400 Version 2 (5738-TC1) licensed program product is installed. PTF numbers SF16482 and SF16950 are also required for the Version 2.0 Release 3.0 system.
3. The setting for the Transform parameter is always ignored; no transform occurs.

Table 2 shows that when sending a spooled file from one Version 3.0 Release 1.0 system to another, any of the native AS/400 data streams can be sent using either SNA or TCP/IP communications protocols.

All the attributes of the original spooled file on the source system will be preserved when sending the spooled file to a target AS/400 system, and the spooled file will print on the target system exactly as it would have done on the source system, provided the target system contains all the necessary resources needed to print the file.

2.4.1 Setup

If the planned communications protocol is to be TCP/IP, the IBM TCP/IP Connectivity Utilities/400 Version 3 (5763-TC1) licensed program product must be installed on both the source and target systems, and the Line Printer Daemon (LPD) function must be started on the target AS/400. This function has been available since Version 2.0 Release 3.0.

TCP/IP is included free of charge in Version 3.0 Release 1.0. SNA communications and SNADS have been included free of charge in all versions of OS/400.

Appropriate line, controller, and device descriptions must be created to establish a communications path between the two systems. It is not the intention of this publication to explain how this is done. Several manuals are available to assist in this configuration, including:

- *AS/400 Printer Device Programming - Version 3*, SC41-3713
- *AS/400 Communications Configuration - Version 3*, SC41-3401
- *SNA Distribution Services - Version 3*, SC41-3410

- *AS/400 TCP/IP Configuration and Reference - Version 3*, SC41-3420
- *AS/400 Printing III*, GG24-4028
- *Communications: OS/400 Communications Configuration Reference*, SC41-0001
- *AS/400 Communications: Distribution Services Network Guide - Version 2*, SC41-9588

If the chosen communications protocol is SNA you must set up the SNA Distribution Services (SNADS) network to enable remote printing in addition to the necessary lines and controllers. When sending a spooled file from one Version 3.0 Release 1.0 system to another a special new user ID, QNETSPLF, is used to send and receive the spooled files. You must ensure that this user ID has appropriate entries in the system directory for each system. Use the WRKDIRE (or WRKDIR) command to view the system directory entries on each system.

In order to send spooled files between two systems, the directory for each system must contain two entries for the QNETSPLF user ID. One entry will be for this user ID on the source system, and the second entry will be made for this user ID on the target system. This second entry can be either for user ID QNETSPLF or for the generic user *ANY.

For example, the following WRKDIRE screen taken from source AS/400 RCHASM03 shows an entry for user ID QNETSPLF on the source system (RCHASM03), as well as an entry for user ID QNETSPLF on the target system (in this case, RCHASM02).

```
                         Work with Directory Entries
Type options, press Enter.
  1=Add      2=Change   4=Remove   5=Display details   6=Print details
  7=Rename   8=Assign different ID to description   9=Add another description
Opt  User ID   Address   Description
     GLMS      RCHASM03  GLMS
     QDFTOWN   QDFTOWN   Default Owner
     QDOC      QDOC      Internal Document Owner
     QLPAUTO   QLPAUTO   Licensed Program Automatic User
     QLPINSTL  QLPINSTL  Licensed Program Install
     QNETSPLF  RCHASM02  To enable remote system printing
     QNETSPLF  RCHASM03  To enable remote system printing
     QRMTCAL   QRMTCAL   OfficeVision/400 Remote Calendar User
     QSECOFR   QSECOFR   Security Officer
     QSECOFR   RCHASM03  Hannah Marie
     QSYS      QSYS      Internal System User Profile
```

Figure 18. Example of WRKDIR Screen on Source System at V3R1

The following WRKDIRE screen taken from source AS/400 RCHASM03 shows an entry for user ID QNETSPLF on the source system (RCHASM03), and an *ANY entry for the target system (in this case, RCHASM02).

```
                          Work with Directory Entries
Type options, press Enter.
  1=Add      2=Change   4=Remove   5=Display details   6=Print details
  7=Rename   8=Assign different ID to description   9=Add another description
Opt  User ID   Address   Description
     *ANY      RCHASM02  Any user ID to system RCHASM02
     GLMS      RCHASM03  GLMS
     QDFTOWN   QDFTOWN   Default Owner
     QDOC      QDOC      Internal Document Owner
     QLPAUTO   QLPAUTO   Licensed Program Automatic User
     QLPINSTL  QLPINSTL  Licensed Program Install
     QNETSPLF  RCHASM03  To enable remote system printing
     QRMTCAL   QRMTCAL   OfficeVision/400 Remote Calendar User
     QSECOFR   QSECOFR   Security Officer
     QSECOFR   RCHASM03  Carl Semyon
     QSYS      QSYS      Internal System User Profile
```

Figure 19. Example of WRKDIR Screen on Target System at V3R1

Both of these examples allow the necessary data and messages to pass from the source system (RCHASM03) to the target system (RCHASM02).

Important:

Similar entries are necessary on the target AS/400 as well.

2.4.2 Using the CRTOUTQ Command to Send to V3R1 OS/400

Once the physical connections have been established and the appropriate entries made in each of the system directories, the remote output queue can be created using the CRTOUTQ command. The important parameters for this command and the values appropriate for sending spooled files from one Version 3.0 Release 1.0 system to another are described in detail in the list below.

OUTQ The qualified name of the output queue being created.

RMTSYS This parameter defines the remote system to which the spooled files will be sent when a remote writer is started. Valid values for this parameter when sending to another Version 3.0 Release 1.0 system are:

***PASTHR** This value is only appropriate for users who pass through from one system to another. It is, however, very useful in such an environment because the remote system does not have to be specified explicitly; the name of the system is determined dynamically at print time. Spooled output will automatically be sent back to the system from which the user issued the STRPASTHR command.

If the spooled file was not created by a job which had passed through from another system, the spooled file will be held.

***INTNETADR** This value is only valid when the TCP/IP communications protocol is being used, and it notifies the AS/400 to use the Internet address

specified on the INTNETADR parameter. The INTNETADR parameter will only be prompted if this value is specified. The value of the CNNTYPE parameter must be *IP.

name This is the name of the target system to which the spooled files are to be sent. This name can be specified for a communications type of either TCP/IP or SNA, but, for SNA only the first eight characters of the name will be used.

RMTPRTQ This parameter defines the output queue on the remote system to which the spooled files will be sent by the remote writer. Valid values when sending to another Version 3.0 Release 1.0 system are:

***USER** Between two Version 3.0 Release 1.0 systems, the file will actually be sent to the user profile QNETSPLF on the target system.

If a user profile exists on the target system, with the same name as the owner of the spooled file on the source system, the file will be spooled to the default output queue for that user.

If the user profile does not exist on the target system, the file will be spooled to the default output queue defined for the QNETSPLF user profile on the target system.

***SYSTEM** Between two Version 3.0 Release 1.0 systems, the file will actually be sent to the user profile QNETSPLF on the target system. It will then be spooled to the designated system printer, as specified in the system value QPRTDEV on the target system.

The spooled file owner will not change, as long as the name of the owner on the source system exists as a user ID on the target system. If this user ID does not exist on the target system, the spooled file will be owned by QNETSPLF.

name Between two Version 3.0 Release 1.0 systems, the file will actually be sent to the user profile QNETSPLF on the target system. The file will then be spooled to the output queue name specified by this name.

The spooled file owner will not change, as long as the name of the owner on the source system exists as a user ID on the target system. If this user ID does not exist on the target system, the spooled file will be owned by QNETSPLF.

AUTOSTRWTR This parameter value specifies the number of remote writers that are started automatically by the source system, at the time the output queue is created. Valid values are *NONE, or a number between 1 and 10.

The names of the remote writers started automatically will use the first 9 characters of the remote output queue name, followed by a single numeric character from 1 to 0. The first remote writer started to remote output queue PAM will be named PAM1, the second PAM2, up to PAM0 for the tenth.

Chapter 3, “Printer Load Balancing” on page 89 discusses the new function of Version 3.0 Release 1.0 which allows up to 10 printers to be attached to a single output queue.

Starting multiple remote writers to a remote output queue may be particularly useful for handling large numbers of spooled files more quickly. With more than one writer started, more than one spooled file can be sent simultaneously to the target system.

CNNTYPE This parameter specifies the type of communications protocol being used between the two Version 3.0 Release 1.0 systems. The values are either *SNA if files are sent using SNA, or *IP if the files are sent using TCP/IP.

DESTTYPE The value of this parameter when sending files between two Version 3.0 Release 1.0 systems must be *OS400. This value can also be specified if the target system is running Version 2.0 Release 3.0 and the communications protocol used is TCP/IP.

TRANSFORM The value of this parameter tells the source AS/400 whether or not to use the host print transform function to transform a spooled file of device type *SCS to ASCII before sending to the remote AS/400.

The value *YES is only used if the spooled file has a device type of *SCS *and* the communications protocol is TCP/IP, so CNNTYPE(*IP) is specified. For any spooled file which is not SCS, this parameter will be ignored, and the host print transform will not be called.

If the host print transform is to be used, then values must be provided for the parameters MFRTYPMDL (Manufacturer Type and Model) and WSCST (Workstation Customization Object). These two parameters are only prompted when TRANSFORM(*YES) is specified. A detailed description of the host print transform function can be found in Chapter 7 of *AS/400 Printing III*, GG24-4028.

Chapter 6, “Advanced Host Print Transform Customization” on page 137 also discusses the host print transform function and provides detailed information on how to create or edit a Workstation Customization Object. You may wish to do this if your ASCII printer is not supported by the host print transform, or if you wish to modify the support which the host print transform provides for your printer.

If the target printer requires an ASCII data stream, the spooled file can be transformed to ASCII on either the source or the target system. You should consider the impact on performance when deciding where to do the transform. This could be one way to avoid an unnecessary performance overhead on a heavily loaded production system. The extent to which the host print transform affects your AS/400 performance depends on the number of printers using it, the number of files being sent to the

printers, the type and model of your system and other such factors.

INTNETADR This parameter is only valid when the communications between the two systems is TCP/IP and the value of *INTNETADR is specified on the remote system parameter (RMTSYS).

The value of this parameter is the Internet address of the target AS/400, specified in the form *nnn.nnn.nnn.nnn*.

2.4.3 Starting a Remote Printer Writer

If you did not specify that at least one remote writer should be started automatically when you created the remote output queue (AUTOSTRWTR parameter), then you must now issue the start remote writer command (STRRMTWTR) to initiate the sending of spooled files from the remote output queue to the target system. Chapter 4 of the manual *AS/400 Printer Device Programming - Version 3*, SC41-3713, contains a detailed description of the start remote writer command.

Remote writers have a writer type of *RMT, while local printer writers have a writer type of *PRT. If you issue the command WRKWTR without changing the default value for the WTR parameter, you will only see a list of the writers with a type of *PRT. To see a list containing remote writers, you must specify WRKWTR WTR(*ALL). However, specifying WTR(*ALL) will only show you started writers. It does not give you a list of every writer in the system.

2.4.4 Examples

The following three examples give you an idea of how you might define a remote output queue to support remote printing to another AS/400 running Version 3.0 Release 1.0.

Figure 20 on page 43 shows an example of the CRTOUTQ parameter values to send spooled files to another AS/400 running Version 3.0 Release 1.0 using SNA communications. The target remote printer queue parameter value is specified as *USER, so any spooled files placed in output queue RMTOUTQ will be sent to the target AS/400 (RCHASM02) and spooled to the default printer of the spooled file owner.

If the spooled file is owned on the source system by user JOHN, and that user profile exists on the target system, the file will be spooled to the default output queue defined in the user profile for JOHN on the target system (RCHASM02). User JOHN will be the owner of the spooled file on both the source and target systems.

If user JOHN does *not* exist on the target system, the file will be spooled to the default output queue for user QNETSPLF on the target system. The spooled file will be owned on the target system by user QNETSPLF.

```
                         Create Output Queue (CRTOUTQ)

 Type choices, press Enter.

 Output queue . . . . . . . . . . > RMTOUTQ       Name
   Library  . . . . . . . . . . . >   QUSRSYS     Name, *CURLIB
 Maximum spooled file size:
   Number of pages  . . . . . . .   *NONE         Number, *NONE
   Starting time  . . . . . . . .   ________      Time
   Ending time  . . . . . . . . .   ________      Time
                + for more values
 Order of files on queue  . . . .   *FIFO         *FIFO, *JOBNBR
 Remote system  . . . . . . . . . > RCHASM02
 Remote printer queue . . . . . .   *USER
 Writers to autostart . . . . . .   *NONE         1-10, *NONE
 Queue for writer messages  . . .   QSYSOPR       Name
   Library  . . . . . . . . . . .     *LIBL       Name, *LIBL, *CURLIB
 Connection type  . . . . . . . .   *SNA          *SNA, *IP
 Destination type . . . . . . . .   *OS400        *OS400, *OS400V2, *PSF2
 Display any file . . . . . . . .   *NO           *NO, *YES, *OWNER
 Job separators . . . . . . . . .   0             0-9, *MSG
 Operator controlled  . . . . . .   *YES          *YES, *NO
 Data queue . . . . . . . . . . .   *NONE         Name, *NONE
   Library  . . . . . . . . . . .     __________  Name, *LIBL, *CURLIB
 Authority to check . . . . . . .   *OWNER        *OWNER, *DTAAUT
 Authority  . . . . . . . . . . .   *USE          Name, *USE, *ALL, *CHANGE...

 F3=Exit   F4=Prompt   F5=Refresh   F12=Cancel   F13=How to use this display
 F24=More keys                                                         Bottom
```

Figure 20. Example of CRTOUTQ Screen for SNA Communications

In Figure 21 on page 44 we show an example of the parameter values which would be valid when sending spooled files to another AS/400 running Version 3.0 Release 1.0 but this time using TCP/IP communications. The remote printer queue is defined as *SYSTEM, so the file will be spooled to the output queue associated with the default system printer (system value QPRTDEV) on the target system. The spooled file will be owned by the same user on the target system as on the source system, unless that user is not defined on the target system, in which case the file will be owned by QNETSPLF.

Note that this example uses an Internet address rather than an actual system name. This is done by specifying *INTNETADR for the RMTSYS parameter, and the actual Internet address in the INTNETADR parameter.

```
                          Create Output Queue (CRTOUTQ)

 Type choices, press Enter.

 Output queue . . . . . . . . . . > RMTOUTQ       Name
   Library  . . . . . . . . . . . >   QUSRSYS     Name, *CURLIB
 Maximum spooled file size:
   Number of pages  . . . . . . .   *NONE         Number, *NONE
   Starting time  . . . . . . . .   _______       Time
   Ending time  . . . . . . . . .   _______       Time
                + for more values
 Order of files on queue  . . . .   *FIFO__       *FIFO, *JOBNBR
 Remote system  . . . . . . . . . > *INTNETADR
 Remote printer queue . . . . . .   *SYSTEM
 Writers to autostart . . . . . .   *NONE         1-10, *NONE
 Queue for writer messages  . . .   QSYSOPR       Name
   Library  . . . . . . . . . . .     *LIBL       Name, *LIBL, *CURLIB
 Connection type  . . . . . . . . > *IP           *SNA, *IP
 Destination type . . . . . . . .   *OS400        *OS400, *OS400V2, *PSF2...
 Transform SCS to ASCII . . . . . > *NO           *YES, *NO
 Internet address . . . . . . . .   9.5.69.250
                                                                        Bottom
 F3=Exit   F4=Prompt   F5=Refresh   F12=Cancel   F13=How to use this display
 F24=More keys
```

Figure 21. Example of CRTOUTQ Screen for TCP/IP Communications

Figure 22 on page 45 shows a typical use of the so-called printer pass-through function provided by remote system printing. A customer has two AS/400 systems running Version 3.0 Release 1.0 known as SYSTEMA and SYSTEMB. Users of each system regularly use display station pass-through to access applications running on the other system, and would like the printed output which they produce to be sent automatically to their local printer.

In the example we show you how to define a remote output queue to enable this printer pass-through function. In this example we have chosen to use SNA communications, but this facility could equally well be defined using TCP/IP. You would just need to change the connection type from *SNA to *IP on the CRTOUTQ command shown in Figure 22 on page 45.

Figure 22 on page 45 shows the definition for the remote output queue to be created on SYSTEMB so that output is automatically sent back from SYSTEMB to the default printer for users passed through from SYSTEMA. Note that the definition of the remote output queue on SYSTEMA to automatically route output back to SYSTEMB would be identical (except for perhaps the name of the output queue itself).

The remote output queue name on SYSTEMB is defined as PASTOSYSA. The remote system is defined as *PASTHR and the remote printer queue is defined as *USER. In this example we have also asked for three remote printer writers to be started automatically.

Any user who passes through from SYSTEMA to SYSTEMB using the STRPASTHR RMTLOCNAME(SYSTEMB) command can direct any printed output generated while using SYSTEMB to the remote output queue PASTOSYSA. The

spooled output will automatically be sent to that user's default printer, as defined in the user profile on SYSTEMA.

Important:

Only spooled files created by users who have passed through using the STRPASTHR command can use this remote output queue. Any spooled files created "natively" on SYSTEMB which are placed on output queue PASTOSYSA will result in the spooled file being held and the following message issued:

```
CPI331C - Writer PASTOSYSA cannot send spooled file XXXXXXXX.
```

This occurs because when *PASTHR is used the system name is determined dynamically at print time, and in this case no system name can be determined.

You then need to define a similar remote output queue on SYSTEMA for users who pass through from SYSTEMB, and you have achieved the desired printer pass-through function.

Note: We have assumed that each user is defined on both SYSTEMA and SYSTEMB, and that the special user ID QNETSPLF has been correctly defined in the SNADS directories of both systems.

```
                        Create Output Queue (CRTOUTQ)

 Type choices, press Enter.

 Output queue . . . . . . . . . . > PASTOSYSA     Name
   Library  . . . . . . . . . . . >   QUSRSYS     Name, *CURLIB
 Maximum spooled file size:
   Number of pages  . . . . . . .   *NONE         Number, *NONE
   Starting time  . . . . . . . .   ________      Time
   Ending time  . . . . . . . . .   ________      Time
                + for more values
 Order of files on queue  . . . .   *FIFO         *FIFO, *JOBNBR
 Remote system  . . . . . . . . . > *PASTHR
 Remote printer queue . . . . . .   *USER
 Writers to autostart . . . . . .   3             1-10, *NONE
 Queue for writer messages  . . .   QSYSOPR       Name
   Library  . . . . . . . . . . .     *LIBL       Name, *LIBL, *CURLIB
 Connection type  . . . . . . . .   *SNA          *SNA, *IP
 Destination type . . . . . . . .   *OS400        *OS400, *OS400V2, *PSF2
 Display any file . . . . . . . .   *NO           *NO, *YES, *OWNER
 Job separators . . . . . . . . .   0             0-9, *MSG
 Operator controlled  . . . . . .   *YES          *YES, *NO
 Data queue . . . . . . . . . . .   *NONE         Name, *NONE
   Library  . . . . . . . . . . .     __________  Name, *LIBL, *CURLIB
 Authority to check . . . . . . .   *OWNER        *OWNER, *DTAAUT
 Authority  . . . . . . . . . . .   *USE          Name, *USE, *ALL, *CHANGE...

 F3=Exit   F4=Prompt   F5=Refresh   F12=Cancel   F13=How to use this display
 F24=More keys                                                        Bottom
```

Figure 22. Example of CRTOUTQ Screen for SNA Communications

2.4.5 Operation and Usage

To use TCP/IP both the source and the target systems must have the appropriate optional TCP/IP licensed program product installed. On the source system this must be IBM TCP/IP Connectivity Utilities/400 Version 3 (5763-TC1), but on the target system it can be either IBM TCP/IP Connectivity Utilities/400 Version 3 (5763-TC1) for Version 3.0 Release 1.0 or IBM TCP/IP Connectivity Utilities/400 Version 2 (5738-TC1) for Version 2.0 Release 3.0. On an Version 2.0 Release 3.0 system, PTF numbers SF16482 and SF16950 are also required.

When sending spooled files to another AS/400 running Version 3.0 Release 1.0 there are no parameter values which are excluded from use on the CRTOUTQ command.

Because the files are sent and received using the special system user profile QNETSPLF, you do not have to enroll all the users who would possibly wish to use this function into the system directory.

When sending spooled files between two AS/400s running Version 3.0 Release 1.0 there is no additional cost for either SNADS or TCP/IP. SNADS does require time and systems administrator skill to set up, but operationally, the source system will receive a confirmation message from the target system that the spooled file has arrived successfully. This message is returned to the SNA Distribution Services Log, which can be viewed by issuing the DSPDSTLOG command. An example of the messages returned to the SNA Distribution Log on the source AS/400 system is shown in Figure 23 on page 47.

TCP/IP is very easy to set up and configure between two AS/400s, but there will be no confirmation that the target system has received the spooled file. An error during transmission using TCP/IP could result in the spooled file being lost.

2.4.6 Spooled File Status

When a file is spooled to a remote output queue, its initial status is likely to be either RDY or DFR. The manual *AS/400 Printer Device Programming - Version 3*, SC41-3713, gives a complete list of the different values for the spooled file status. Here we are just discussing those statuses that are of particular interest to remote system printing.

The status DFR is new with Version 3.0 Release 1.0 and is used to stop spooled files from being printed which exceed the number of pages defined for printing at this time of day. This new function is enabled using the new MAXPAGES parameter of the CRTOUTQ command. The use of this parameter is discussed in detail in Chapter 3, “Printer Load Balancing” on page 89.

When a spooled file is being sent to the remote AS/400, its status changes to SND.

If the file is being sent to the target AS/400 using SNA communications, the file will remain in the SND status until confirmation messages are received from the target system.

At this time the spooled file will be deleted or saved depending on the value of the SAVE spooled file attribute.

The confirmation messages appear in the SNA Distribution Services Log and can be displayed using the DSPDSTLOG command. Figure 23 on page 47 shows a

set of confirmation messages using the DSPDSTLOG command on the source system. These were the messages displayed on the SNADS Log for a spooled file sent to the remote output queue SOURCEQ on the source AS/400 system RCHASM03. This remote output queue was set up to send spooled files to a specific output queue on the target system RCHAS040. Between two AS/400 systems running Version 3.0 Release 1.0 a special user ID QNETSPLF is used to send and receive the spooled files, and you can see from the SNADS Log, that the messages between the two systems all originate from this special user ID.

```
                      Display Distribution Services Log

Type options, press Enter.
  5=Display details

    Function  Entry  ------Logged------                ----Originator----  Seq
Opt   Type    Type   Date      Time      Job Name      User ID   Address   Nbr
 _    *ORG    *NRM   10/20/94  09:59:18  SOURCEQ       QNETSPLF  RCHASM03  0016
 _    *RTR    *NRM   10/20/94  09:59:19  QMSF          QNETSPLF  RCHASM03  0016
 _    *SND    *NRM   10/20/94  09:59:23  RCHAS040      QNETSPLF  RCHASM03  0016
 _    *RCV    *NRM   10/20/94  09:59:30  RCHAS14900    QNETSPLF  RCHAS040  0011
 _    *RTR    *NRM   10/20/94  09:59:31  QMSF          QNETSPLF  RCHAS040  0011
 _    *ARV    *NRM   10/20/94  09:59:32  QNFTP         QNETSPLF  RCHAS040  0011
```

Figure 23. Confirmation Messages Returned to SNADS Log on Source AS/400

Figure 24 shows the corresponding entries logged on the target system, RCHAS040.

```
                      Display Distribution Services Log

Type options, press Enter.
  5=Display details

    Function  Entry  ------Logged------                ----Originator----  Seq
Opt   Type    Type   Date      Time      Job Name      User ID   Address   Nbr
 _    *RCV    *NRM   10/20/94  09:58:28  RCHASM03      QNETSPLF  RCHASM03  0016
 _    *RTR    *NRM   10/20/94  09:58:30  QMSF          QNETSPLF  RCHASM03  0016
 _    *ORG    *NRM   10/20/94  09:58:31  QNFTP         QNETSPLF  RCHAS040  0011
 _    *ARV    *NRM   10/20/94  09:58:31  QNFTP         QNETSPLF  RCHASM03  0016
 _    *RTR    *NRM   10/20/94  09:58:32  QMSF          QNETSPLF  RCHAS040  0011
 _    *SND    *NRM   10/20/94  09:58:34  RCHAS149      QNETSPLF  RCHAS040  0011
```

Figure 24. Confirmation Messages Returned to SNADS Log on Target AS/400

If the file is being sent to the target AS/400 using TCP/IP communications there is no confirmation message from the target system. The spooled file will be deleted or saved when the source system has finished sending the file. If there are any problems during transmission, the spooled file could be lost.

2.5 V3R1 OS/400 to V2 OS/400

Table 3 outlines the possible combinations for four of the parameters used in the CRTOUTQ command to establish a remote printing connection to another AS/400 running any release of Version 2 of OS/400. Following the table we will discuss the various setup options which are valid, and the restrictions which apply.

Table 3. Valid and Invalid Configurations for Sending from V3R1 OS/400 to V2 OS/400

Data Stream Type	Destination Type	Connection Type	Transform	Comments
*SCS	*OS400V2	*SNA	Not Permitted	Supported
*IPDS	*OS400V2	*SNA	Not Permitted	Supported
*AFPDS	*OS400V2	*SNA	Not Permitted	Supported - Note 1
*USERASCII	*OS400V2	*SNA	Not Permitted	Supported
*SCS	*OS400V2	*IP		Not Supported - Note 2
*IPDS	*OS400V2	*IP		Not Supported - Note 2
*AFPDS	*OS400V2	*IP		Not Supported - Note 2
*USERASCII	*OS400V2	*IP		Not Supported - Note 2

Note:

1. If the AFPDS spooled file uses any resources, such as overlays, page segments or host resident fonts, these resources must exist on the target system if they are to be included in the printed output. The AS/400 does not insert resources in the spooled file before sending the file to the target system.
2. If the target system is running Version 2.0 Release 3.0 and has the IBM TCP/IP Connectivity Utilities/400 Version 2 (5738-TC1) licensed program installed, then a connection type of *IP is supported, but only if the destination type is specified as *OS400. PTF numbers SF16482 and SF16950 are also required for the Version 2.0 Release 3.0 system. Refer to 2.4, “V3R1 OS/400 to V3R1 OS/400” on page 36 for more details.

As can clearly be seen from Table 3 the communications protocol cannot be TCP/IP when sending remote printing to a V2 AS/400 using the *OS400V2 destination type. With the exception of Version 2.0 Release 3.0 there is no support for sending and receiving files using TCP/IP in Version 2 of the OS/400 operating system.

Note: If the target system is running Version 2.0 Release 3.0 *and* each AS/400 has the TCP/IP licensed program product installed, then TCP/IP can be used to send files to the target AS/400, but the destination type used should be *OS400. Refer to 2.4, “V3R1 OS/400 to V3R1 OS/400” on page 36 for a detailed description of how to configure the systems under these circumstances.

2.5.1 Setup

If the planned communications protocol is to be TCP/IP, the IBM TCP/IP Connectivity Utilities/400 Version 3 (5763-TC1) licensed program product must be installed on both the source and target systems, and the Line Printer Daemon (LPD) function must be started on the target AS/400. This function has been available since Version 2.0 Release 3.0.

TCP/IP is included free of charge in Version 3.0 Release 1.0. SNA communications and SNADS have been included free of charge in all versions of OS/400.

Appropriate line, controller, and device descriptions must be created to establish a communications path between the two systems. It is not the intention of this publication to explain how this is done. Several manuals are available to assist in this configuration, including:

- *AS/400 Printer Device Programming - Version 3*, SC41-3713
- *AS/400 Communications Configuration - Version 3*, SC41-3401
- *SNA Distribution Services - Version 3*, SC41-3410
- *AS/400 TCP/IP Configuration and Reference - Version 3*, SC41-3420
- *AS/400 Printing III*, GG24-4028
- *Communications: OS/400 Communications Configuration Reference*, SC41-0001
- *AS/400 Communications: Distribution Services Network Guide - Version 2*, SC41-9588

If the chosen communications protocol is SNA you must set up the SNA Distribution Services (SNADS) network to enable remote printing in addition to the necessary lines and controllers. When sending a spooled file from a Version 3.0 Release 1.0 system to a Version 2 system a special new user ID, QNETSPLF, is used to send the spooled files from the Version 3.0 Release 1.0 system. You must ensure that this user ID has appropriate entries in the system directory. Use the WRKDIRE (or WRKDIR) command to view the system directory entries.

In order to send spooled files between two systems, the directory on the target system must contain two entries for the QNETSPLF user ID. One entry will be for this user ID on the source system, and the second entry will be made for this user ID on the target system. This second entry can be either for user ID QNETSPLF or for the generic user *ANY.

See 2.4.1, “Setup” on page 37 for details on SNADS configuration for the source Version 3.0 Release 1.0 system.

The Version 2 system must also have special SNADS configuration. It must have an entry for the user to receive the file, and an entry to route an acknowledgment message back to QNETSPLF on the source system. The following screens show two possible ways to do this.

In both examples we are sending from a Version 3.0 Release 1.0 source AS/400 called RCHASM03 to user GLMS on a Version 2.0 Release 3.0 target system called RCHASM01.

For example, the following WRKDIR screen taken from target Version 2.0 Release 3.0 AS/400 RCHASM01 shows an entry for user ID QNETSPLF on the source system (RCHASM03), as well as an entry for user ID GLMS on the target system (in this case, RCHASM01). The first entry routes the actual spooled file; the second, messages back to the source system.

```
                          Work with Directory Entries
Type options, press Enter.
  1=Add      2=Change   4=Remove   5=Display details   6=Print details
  7=Rename   8=Assign different ID to description   9=Add another description
Opt  User ID   Address   Description
     GLMS      RCHASM01  Gary "Bhajiwala" Mullen-Schultz
     QDFTOWN   QDFTOWN   Default Owner
     QDOC      QDOC      Internal Document Owner
     QLPAUTO   QLPAUTO   Licensed Program Automatic User
     QLPINSTL  QLPINSTL  Licensed Program Install
     QNETSPLF  RCHASM03  To enable remote system printing
     QRMTCAL   QRMTCAL   OfficeVision/400 Remote Calendar User
     QSECOFR   QSECOFR   Security Officer
     QSECOFR   RCHASM01  Hannah Marie
     QSYS      QSYS      Internal System User Profile
```

Figure 25. Example of WRKDIR Screen on Target System at V2R3 (Option 1)

The following WRKDIR screen taken from target AS/400 RCHASM01 shows an entry for user ID *ANY on the source system (RCHASM03), and an entry for GLMS on the target system (in this case, RCHASM01).

```
                          Work with Directory Entries
Type options, press Enter.
  1=Add      2=Change   4=Remove   5=Display details   6=Print details
  7=Rename   8=Assign different ID to description   9=Add another description
Opt  User ID   Address   Description
     *ANY      RCHASM03  Any user ID to system RCHASM02
     GLMS      RCHASM01  Gary "Bhajiwala" Mullen-Schultz
     QDFTOWN   QDFTOWN   Default Owner
     QDOC      QDOC      Internal Document Owner
     QLPAUTO   QLPAUTO   Licensed Program Automatic User
     QLPINSTL  QLPINSTL  Licensed Program Install
     QRMTCAL   QRMTCAL   OfficeVision/400 Remote Calendar User
     QSECOFR   QSECOFR   Security Officer
     QSECOFR   RCHASM03  Carl Semyon
     QSYS      QSYS      Internal System User Profile
```

Figure 26. Example of WRKDIR Screen on Target System at V2R3 (Option 2)

Both of these examples allow the necessary data and messages to pass from the source system (RCHASM03) at Version 3.0 Release 1.0 to the target system (RCHASM01) at Version 2.0 Release 3.0.

2.5.2 Using the CRTOUTQ Command to Send to OS/400 V2

Once the physical connections have been established and the appropriate entries made in each of the system directories, the remote output queue can be created on the source AS/400 using the CRTOUTQ command. The important parameters for this command and the values appropriate for sending spooled files to an AS/400 running Version 2 of the OS/400 operating system are described in detail in the list below.

OUTQ The qualified name of the output queue being created.

RMTSYS This parameter defines the remote system to which the spooled files will be sent when a remote writer is started. However, when you are sending to an AS/400 running OS/400 Version 2, this parameter maps to the address of the target user in the SNADS system directory of the target system. In some cases the address for a user may not be the same as the remote system name. This possible problem is discussed in more detail in 2.5.5, “Operation and Usage” on page 55.

Valid values for this parameter when sending to an AS/400 running Version 2 of the OS/400 operating system are:

***PASTHR** This value is only appropriate for users who pass through from one system to another. It is, however, very useful in such an environment because the remote system does not have to be specified explicitly; the name of the system is determined dynamically at print time. Spooled output will automatically be sent back to the system from which the user issued the STRPASTHR command.

If the spooled file was not created by a job which had passed through from another system, the spooled file will be held.

name This name should be the address in the target system SNADS directory associated with the target user ID. In many cases the address will be the same as the name of the target system, but it does not have to be.

RMTPRTQ This parameter defines the output queue on the remote system to which the spooled files will be sent by the remote writer. Valid values for this parameter when sending to an AS/400 running Version 2 of the OS/400 operating system are:

***USER** The file will be sent to the file owner’s user ID on the target system.

If a user profile exists on the target system with the same name as the owner of the spooled file on the source system, the file will be spooled to the default output queue for that user.

If the user profile does not exist on the target system, an error will be sent to the source system and the spooled file will be held.

name The spooled file will be sent to the user ID on the target system with the same name as that specified here. The file will then be spooled to the default output queue for this user.

If the user ID specified here does not exist on the target system the spooled file will be held.

Note that this is different from the V3 to V3 example in that there is no QNETSPLF user ID on the target AS/400 to resolve the actual output queue name. It will not suffice to simply add this user ID to your Version 2 system; logic was added in Version 3.0

Release 1.0 to determine where spooled files sent to QNETSPLF should actually go.

AUTOSTRWTR This parameter value specifies the number of remote writers that are started automatically by the source system, at the time the output queue is created. Valid values are *NONE, or a number between 1 and 10.

The names of the remote writers started automatically will use the first 9 characters of the remote output queue name, followed by a single numeric character from 1 to 0. The first remote writer started to remote output queue CARL will be named CARL1, the second CARL2, up to CARL0 for the tenth.

Chapter 3, “Printer Load Balancing” on page 89 discusses the new function of Version 3.0 Release 1.0 which allows up to 10 printers to be attached to a single output queue.

Starting multiple remote writers to a remote output queue may be particularly useful for handling large numbers of spooled files more quickly. With more than one writer started, more than one spooled file can be sent simultaneously to the target system.

CNNTYPE This parameter specifies the type of communications protocol being used between the two AS/400 systems. The only valid value when the destination type is *OS400V2 is *SNA.

If the target AS/400 is running Version 2.0 Release 3.0 and has TCP/IP installed, then *IP can be used as a value for this parameter, but the destination type must be *OS400.

DESTTYPE The value of this parameter when sending files to an AS/400 running Version 2 of the OS/400 operating system using SNA communications must be *OS400V2.

TRANSFORM The value of this parameter cannot be set, and defaults to *NO.

2.5.3 Starting a Remote Printer Writer

If you did not specify that at least one remote writer should be started automatically when you created the remote output queue (AUTOSTRWTR parameter), then you must now issue the start remote writer command (STRRMTWTR) to initiate the sending of spooled files from the remote output queue to the target system. Chapter 4 of the manual *AS/400 Printer Device Programming - Version 3*, SC41-3713, contains a detailed description of the start remote writer command.

Remote writers have a writer type of *RMT, while local printer writers have a writer type of *PRT. If you issue the command WRKWTR without changing the default value for the WTR parameter, you will only see a list of the writers with a type of *PRT. To see a list containing remote writers, you must specify WRKWTR WTR(*ALL). However, specifying WTR(*ALL) will only show you started writers. It does not give you a list of every writer in the system.

2.5.4 Examples

The following two examples give you an idea of how you might define a remote output queue to support remote printing to another AS/400 running OS/400 Version 2.

The example shown in Figure 27 has the remote printer queue defined as *USER. A spooled file, owned on the source system by user LOIS, will be sent to the default output queue defined in the user profile for user LOIS on the target system.

```
                         Create Output Queue (CRTOUTQ)

Type choices, press Enter.

Output queue . . . . . . . . . . > RMTOUTQ       Name
  Library  . . . . . . . . . . . >   QUSRSYS     Name, *CURLIB
Maximum spooled file size:
  Number of pages  . . . . . . . .   *NONE        Number, *NONE
  Starting time  . . . . . . . . .   ________     Time
  Ending time  . . . . . . . . . .   ________     Time
               + for more values
Order of files on queue  . . . .   *FIFO        *FIFO, *JOBNBR
Remote system  . . . . . . . . . > RCHASM01
Remote printer queue . . . . . .   *USER
Writers to autostart . . . . . .   *NONE        1-10, *NONE
Queue for writer messages  . . .   QSYSOPR      Name
  Library  . . . . . . . . . . .     *LIBL      Name, *LIBL, *CURLIB
Connection type  . . . . . . . .   *SNA         *SNA, *IP
Destination type . . . . . . . .   *OS400V2     *OS400, *OS400V2, *PSF2
Display any file . . . . . . . .   *NO          *NO, *YES, *OWNER
Job separators . . . . . . . . .   0            0-9, *MSG
Operator controlled  . . . . . .   *YES         *YES, *NO
Data queue . . . . . . . . . . .   *NONE        Name, *NONE
  Library  . . . . . . . . . . .     __________ Name, *LIBL, *CURLIB
Authority to check . . . . . . .   *OWNER       *OWNER, *DTAAUT
Authority  . . . . . . . . . . .   *USE         Name, *USE, *ALL, *CHANGE...

F3=Exit   F4=Prompt   F5=Refresh   F12=Cancel   F13=How to use this display
F24=More keys                                                          Bottom
```

Figure 27. Example of CRTOUTQ Screen for Sending to V2 OS/400

If a user profile for LOIS does not exist on the target system an error will be returned to the source system and the spooled file will be held on the remote output queue. The message shown in Figure 28 on page 54 will be returned to the writer's message queue of the source system. Press the Help key on these messages to get further information.

```
                                Display Messages
                                                          System:   RCHASM03
Queue . . . . . :   QSYSOPR                 Program . . . . :   *DSPMSG
  Library . . . :     QSYS                    Library . . . :
Severity  . . . :   99                      Delivery  . . . :   *HOLD

Type reply (if required), press Enter.
  Distribution of spooled file QSYSPRT to user LOIS RCHASM01 failed.
  Distribution of spooled file QSYSPRT to user LOIS RCHASM01 failed.
  File QSYSPRT held by writer RMTOUTQ on output queue RMTOUTQ in QUSRSYS.
```

Figure 28. Example of Error Message Returned when Spooled File not Sent

Figure 29 on page 55 shows a typical setup which could be used to control remote printing. In this example we assume that a user wishes to route output from the Version 3.0 Release 1.0 system to PRT04, which is connected to an AS/400 running Version 2.0 Release 2.0 with a system name of RCHASM01. The name of the output queue on the source Version 3.0 Release 1.0 system is PRT04. This output queue has been defined as a remote output queue by specifying RMTSYS(RCHASM01) and the remote printer queue is defined as PRT04 by specifying RMTPRTQ(PRT04). If a user profile is created on the target V2 system (RCHASM01) with a name of PRT04, and a default output queue of PRT04, any spooled files placed in the remote output queue PRT04 on the V3 system will automatically be routed to printer PRT04 on the V2 system.

```
                          Create Output Queue (CRTOUTQ)

 Type choices, press Enter.

 Output queue . . . . . . . . . . > PRT04         Name
   Library  . . . . . . . . . . . >   QUSRSYS     Name, *CURLIB
 Maximum spooled file size:
   Number of pages  . . . . . . .   *NONE         Number, *NONE
   Starting time  . . . . . . . .   ________      Time
   Ending time  . . . . . . . . .   ________      Time
                + for more values
 Order of files on queue  . . . .   *FIFO         *FIFO, *JOBNBR
 Remote system  . . . . . . . . . > RCHASM01
 Remote printer queue . . . . . .   PRT04

 Writers to autostart . . . . . .   *NONE         1-10, *NONE
 Queue for writer messages  . . .   QSYSOPR       Name
   Library  . . . . . . . . . . .     *LIBL       Name, *LIBL, *CURLIB
 Connection type  . . . . . . . .   *SNA          *SNA, *IP
 Destination type . . . . . . . .   *OS400V2      *OS400, *OS400V2, *PSF2
 Display any file . . . . . . . .   *NO           *NO, *YES, *OWNER
 Job separators . . . . . . . . .   0              0-9, *MSG
 Operator controlled  . . . . . .   *YES          *YES, *NO
 Data queue . . . . . . . . . . .   *NONE         Name, *NONE
   Library  . . . . . . . . . . .     _________   Name, *LIBL, *CURLIB
 Authority to check . . . . . . .   *OWNER        *OWNER, *DTAAUT
 Authority  . . . . . . . . . . .   *USE          Name, *USE, *ALL, *CHANGE...

 F3=Exit   F4=Prompt   F5=Refresh   F12=Cancel   F13=How to use this display
 F24=More keys                                                        Bottom
```

Figure 29. Example of CRTOUTQ Screen for Sending to V2 OS/400

2.5.5 Operation and Usage

It is very important to understand that the address in the system directory of the target system must match the remote system name specified on the RMTSYS parameter of the CRTOUTQ command on the source system.

On many systems the system directory entries for OfficeVision/400 users do not use the system name for their address. In such cases you must use the address on the RMTSYS parameter, and not the name of the remote system.

There are four standard system user IDs, where the default address is the same as the user ID. These are QSECOFR, QSYS, QUSER and QDOC. You cannot send spooled files to these users when the target system is running Version 2 of the OS/400 operating system.

In practice, if you are planning to send spooled files to a remote system, create a user ID on that system with the same name as the destination printer, for example PRT04, and ensure that the output queue specified in the PRT04 user profile is the same as that of the actual PRT04 printer. On the CRTOUTQ command, specify PRT04 explicitly on the remote printer queue parameter (RMTPRTQ), as shown in example Figure 29.

2.5.6 Spooled File Status

When a file is spooled to a remote output queue, its initial status is likely to be either RDY or DFR. The manual *AS/400 Printer Device Programming - Version 3*, SC41-3713, gives a complete list of the different values for the spooled file status. Here we are just discussing those statuses that are of particular interest to remote system printing.

The status DFR is new with Version 3.0 Release 1.0 and is used to stop spooled files from being printed which exceed the number of pages defined for printing at this time of day. This new function is enabled using the new MAXPAGES parameter of the CRTOUTQ command. The use of this parameter is discussed in detail in Chapter 3, “Printer Load Balancing” on page 89.

When a spooled file is being sent to the remote AS/400, its status changes to SND.

If the file is being sent to the target AS/400 using SNA communications, the file will remain in the SND status until confirmation messages are received from the target system.

At this time the spooled file will be deleted or saved depending on the value of the SAVE spooled file attribute.

The confirmation messages appear in the SNA Distribution Services Log and can be displayed using the DSPDSTLOG command. Figure 30 shows a set of confirmation messages using the DSPDSTLOG command. These were the messages displayed on the SNADS Log for a spooled file sent to the remote output queue SOURCEQ on the source AS/400 system RCHASM03. This remote output queue was set up to send spooled files to a specific user ID (ITSCID10) on the target system RCHAS008.

```
                      Display Distribution Services Log

Type options, press Enter.
  5=Display details

    Function  Entry  ------Logged------                ----Originator----  Seq
Opt   Type    Type   Date      Time      Job Name      User ID   Address   Nbr
      *ORG    *NRM    7/12/94  14:02:19  SOURCEQ       QNETSPLF  RCHASM03  0003
      *RTR    *NRM    7/12/94  14:02:19  QROUTER       QNETSPLF  RCHASM03  0003
      *SND    *NRM    7/12/94  14:02:21  RCHAS008      QNETSPLF  RCHASM03  0003
      *RCV    *NRM    7/12/94  14:02:28  RCHAS00800    ITSCID10  RCHAS008  0002
      *RTR    *NRM    7/12/94  14:02:29  QROUTER       ITSCID10  RCHAS008  0002
      *ARV    *NRM    7/12/94  14:02:30  QNFTP         ITSCID10  RCHAS008  0002
```

Figure 30. Example of Confirmation Messages Returned to SNADS Log

You will notice that the Version 3.0 Release 1.0 system uses the special new user ID QNETSPLF to send the spooled file to the target system. The response messages, from the target system come from the target user ID (ITSCID10).

2.6 V3R1 OS/400 to System/390

Table 4 outlines the possible combinations for four of the parameters used in the CRTOUTQ command to establish a remote printing connection to a System/390 mainframe running VM or MVS.

Note: Sending spooled files to a VSE/Power system should be possible, but it is not supported by IBM and the user is completely responsible for configuration, maintenance, and problem determination.

Following the table we will discuss the various setup options which are valid, and the restrictions which apply.

Table 4. Valid and Invalid Configurations for Sending from V3R1 OS/400 to System 390

Data Stream Type	Destination Type	Connection Type	Transform	Comments
*SCS	*S390	*SNA	Not Permitted	Supported
*IPDS	*S390	*SNA	Not Permitted	Supported - Note 1
*AFPDS	*S390	*SNA	Not Permitted	Supported - Note 2
*USERASCII	*S390	*SNA		Not Supported
*SCS	*S390	*IP		Not Supported
*IPDS	*S390	*IP		Not Supported
*AFPDS	*S390	*IP		Not Supported
*USERASCII	*S390	*IP		Not Supported

Note:

1. The ability to send the AS/400 IPDS sub-set data stream to a S/390* system is restricted. The data stream cannot contain any special device requirements such as fonts, barcodes or rotated text.
2. If the AFPDS spooled file uses any resources, such as overlays, page segments or host resident fonts, these resources must exist on the target system if they are to be included in the printed output. The AS/400 does not insert resources in the spooled file before sending the file to the target system.

As can clearly be seen from Table 4, the communications protocol cannot be TCP/IP when sending spooled files to a System/390 system.

Additionally, it is not permitted to send spooled files with a data stream type of *USERASCII to a System/390 system.

2.6.1 Setup

The source AS/400 system must have the IBM Communications Utilities/400 Version 3 (5763-CM1) licensed program product installed. This product contains the VM/MVS bridge function which is used to establish distribution services between an AS/400 SNADS and either a VM system running Remote Spooling Communication Subsystem (RSCS) or an MVS system running Job Entry Subsystem (JES2 or JES3).

The bridge uses Network Job Entry (NJE) across an SNA communications protocol.

Appropriate line, controller, and device descriptions must be created to establish a communications path between the two systems. It is not the intention of this publication to explain how this is done. The manual *AS/400 Communications:*

Distribution Services Network Guide - Version 2, SC41-9588, provides additional information to help you configure these descriptions on both systems.

Once the communication path has been established, you must set up the SNA Distribution Services (SNADS) network to enable remote printing. On the source system you must ensure that directory entries exist for all the user profiles on the target system to which remote spooled files will be sent. In addition, the Version 3.0 Release 1.0 source system uses a special user ID, QNETSPLF to send spooled files, and receive messages. You must add a directory entry for this user profile on the source AS/400 systems.

2.6.2 Using the CRTOUTQ Command to Send to System/390

Once the physical connections have been established and the appropriate entries made in each of the system directories, the remote output queue can be created using the CRTOUTQ command. The important parameters for this command and the values appropriate for sending spooled files to an MVS or VM system are described in detail in the list below.

OUTQ The qualified name of the output queue being created.

RMTSYS This parameter defines the name of the remote system to which the spooled files will be sent. The only valid value for this parameter when sending to an MVS or VM system is the node name of the remote system.

RMTPRTQ This parameter defines which user or which printer the spooled file will be sent to on the target system, by the remote writer. Valid values for this parameter when sending to an MVS or VM system are:

***USER** The file will be sent to the file owner's user ID on the target system.

If a user ID exists on the target system, with the same name as that of the spooled file owner on the source system, the file will be spooled to that user.

If the user ID does not exist on the target system, the file will be lost, unless the SAVE spooled file parameter is set to *YES.

Confirmation messages are sent out by the System/390 to tell you whether the spooled file arrived successfully, but these messages have a different format from VM and MVS. For this reason the AS/400 cannot use the text of the message to determine if the transmission was successful.

The detail of the message content can be viewed on the QNETSPLF message queue.

***SYSTEM** The spooled file will be sent to the default system printer defined on the target system. During the setting up of the network parameters on VM or MVS to identify the AS/400 to that system, one of the VM or MVS defined printers will be associated with the AS/400 definition. If the value of the remote printer queue parameter is *SYSTEM, the spooled file will be sent to this printer.

name The spooled file will be sent to the remote printer on the target system with the same name as that specified here.

AUTOSTRWTR This parameter value specifies the number of remote writers that are started automatically by the source system, at the time the remote output queue is created. Valid values are *NONE, or a number between 1 and 10.

The names of the remote writers started automatically will use the first 9 characters of the remote output queue name, followed by a single numeric character from 1 to 0. The first remote writer started to remote output queue HANNAH will be named HANNAH1, the second HANNAH2, up to HANNAH0 for the tenth.

Chapter 3, “Printer Load Balancing” on page 89 discusses the new function of Version 3.0 Release 1.0 which allows up to 10 printers to be attached to a single output queue.

Starting multiple writers to a remote output queue may be particularly useful for handling large numbers of spooled files more quickly. With more than one writer started, more than one spooled file can be sent simultaneously to the target system.

CNNTYPE This parameter specifies the type of communications protocol being used between the two systems. The only valid value when the target system is running MVS or VM is *SNA.

DESTTYPE The value of this parameter when sending files to a System/390 running MVS or VM, must be *S390.

CLASS This parameter defines the VM or MVS SYSOUT class to be used for the printing of this spooled file, on the target system. The default value for this parameter is CLASS(A), but it can have any of the values A through Z or 0 through 9.

FCB This parameter specifies the name of the Forms Control Buffer (FCB), used on the VM or MVS system to control the printing of this spooled file.

An FCB is used on a VM or MVS system to control the printing of line data. This parameter is only valid if the data stream for the spooled file is SCS. When an SCS spooled file is sent to MVS or VM, the data format on the SNDNETSPLF command is set to *RCDDATA, so effectively the file is transformed to line data.

If you specify a name of no more than 4 characters, such as JOHN, PSF/VM or PSF/MVS will look for a resource P1JOHN to use to format the line data for AFP* printing. This is only valid for a spooled file with data type *SCS.

If the destination printer is a line printer, a true FCB with the name JOHN, will be used to format the printed output. Valid values for this parameter are:

***NONE** No FCB is used when sending spooled files.

***USRDTA** The first eight characters of the user data spooled file attribute determines the name of the FCB to be used on the System/390.

If the user data is blank, no FCB will be used.

***PRTF** The first eight characters of the printer file used to create to spooled file will be used for the name of the FCB to be used on the System/390.

name The name of the FCB to be used on the VM or MVS system to control the printing of this spooled file.

2.6.3 Starting a Remote Writer

If you did not specify that at least one remote writer should be started automatically on the source AS/400 system, then you must now issue the start remote writer command (STRRMTWTR). Chapter 4 of the manual *AS/400 Printer Device Programming - Version 3*, SC41-3713, contains a detailed description of the start remote writer command.

Remote writers have a writer type of *RMT. Local printer writers have a writer type of *PRT. If you issue the command WRKWTR without changing the default value for the WTR parameter, you will only see a list of the writers with a type of *PRT. To see a list containing remote writers, you must specify WRKWTR WTR(*ALL). However, specifying WTR(*ALL) will only show you started writers. It does not give you a list of every writer in the system.

2.6.4 Examples

The example shown in Figure 31 will send the spooled file to the system printer associated with the definition for the source AS/400, on the target VM or MVS system. You may need to create appropriate entries for QNETSPLF on the target system.

```
                         Create Output Queue (CRTOUTQ)

Type choices, press Enter.

Output queue . . . . . . . . . . > AST0390       Name
  Library  . . . . . . . . . . . >   QUSRSYS     Name, *CURLIB
Maximum spooled file size:
  Number of pages  . . . . . . .   *NONE         Number, *NONE
  Starting time  . . . . . . . .                 Time
  Ending time  . . . . . . . . .                 Time
               + for more values
Order of files on queue  . . . .   *FIFO         *FIFO, *JOBNBR
Remote system  . . . . . . . . . > RCHVMW2
Remote printer queue . . . . . . > *SYSTEM
Writers to autostart . . . . . .   *NONE         1-10, *NONE
Queue for writer messages  . . .   QSYSOPR       Name
  Library  . . . . . . . . . . .     *LIBL       Name, *LIBL, *CURLIB
Connection type  . . . . . . . .   *SNA          *SNA, *IP
Destination type . . . . . . . . > *S390         *OS400, *OS400V2, *PSF2
VM/MVS class . . . . . . . . . .   A              A, B, C, D, E, F, G, H,
Forms Control Buffer . . . . . .   *NONE         Character value, *NONE.
Text 'description' . . . . . . . > 'AS400 to S/390 System Printer'
                                                                      Bottom
F3=Exit   F4=Prompt   F5=Refresh   F10=Additional parameters   F12=Cancel
F13=How to use this display        F24=More keys
```

Figure 31. Example of CRTOUTQ Command for Sending to S/390 System

In the second example shown in Figure 32 on page 61 the value for the remote system has been specified as *USER. In this case the remote spooled file will be sent to the user ID on the target VM or MVS system with the same name as that of the owner on the source AS/400.

If this user ID does not exist on the target VM or MVS system the file will be discarded by the target system. If the SAVE spooled file attribute on the AS/400 was set to *NO, then the spooled file will also be deleted from the AS/400 remote output queue.

Messages returned from the target VM or MVS system are not used to confirm that the spooled file arrived successfully.

```
                         Create Output Queue (CRTOUTQ)

Type choices, press Enter.

Output queue . . . . . . . . . . > ITSCID10      Name
  Library  . . . . . . . . . . . >   QUSRSYS     Name, *CURLIB
Maximum spooled file size:
  Number of pages  . . . . . . .   *NONE         Number, *NONE
  Starting time  . . . . . . . .                 Time
  Ending time  . . . . . . . . .                 Time
              + for more values
Order of files on queue  . . . .   *FIFO         *FIFO, *JOBNBR
Remote system  . . . . . . . . . > RCHVMW2
Remote printer queue . . . . . . > *USER
Writers to autostart . . . . . .   *NONE         1-10, *NONE
Queue for writer messages  . . .   QSYSOPR       Name
  Library  . . . . . . . . . . .     *LIBL       Name, *LIBL, *CURLIB
Connection type  . . . . . . . .   *SNA          *SNA, *IP
Destination type . . . . . . . . > *S390         *OS400, *OS400V2, *PSF2
VM/MVS class . . . . . . . . . .   A             A, B, C, D, E, F, G, H,
Forms Control Buffer . . . . . .   *NONE         Character value, *NONE.
Text 'description' . . . . . . . > 'AS400 to same user on S/390'
                                                                      Bottom
F3=Exit   F4=Prompt   F5=Refresh   F10=Additional parameters   F12=Cancel
F13=How to use this display        F24=More keys
```

Figure 32. Example of CRTOUTQ Command for Sending to S/390 System

In practice, most customers will specify the name of a VM or MVS printer explicitly, and define the name of the remote output queue to be the same name as the destination printer on the target S/390 system. This set up makes it very easy for users, who are familiar with the name of their local printer, to route output to it using the remote printing function of Version 3.0 Release 1.0.

2.6.5 Operation and Usage

If the spooled file to be sent to the VM or MVS system is using the Advanced Function Printing* Data Stream (AFPDS), and it specifies the use of AFP resources such as overlays, page segments and host resident fonts, it is important to understand that these resources must exist in the PSF resource libraries on the target system before the spooled file can be printed with same fidelity you would expect on the AS/400.

On a System/390, PSF resources must adhere to a naming convention which is not required on the AS/400. All overlays used on a System/390 must be a maximum of eight characters beginning with the characters O1. All page segments to used on a System/390 must be a maximum of eight characters beginning with the characters S1.

Overlays created using the AS/400 Advanced Function Printing Utilities/400 Version 3 (5763-AF1) may use structured fields not supported on versions of Print Services Facility*/VM (PSF/VM) or PSF/MVS prior to Version 2.1.

2.6.5.1 Migrating Resources to VM or MVS

To migrate an overlay or page segment from the AS/400 to a VM or MVS system you must first use the CVTOVLPFM command (for an overlay) or the CVTPAGSPFM command (for a page segment) to convert the AS/400 object to a physical file. When using this command, you must ensure that the format of the data is specified as DTAFMT(*FIXED). The resulting physical file can then be sent to the target system, using the SNDNETF command, and loaded into the appropriate resource library of PSF/VM or PSF/MVS.

2.6.5.2 Managing Font Resources

It is not possible to transfer an AS/400 font resource to VM or MVS, but you do have to ensure that any font resources which you wish to use with your output are stored in the PSF/VM or PSF/MVS font resource library.

The easiest way to ensure this is to use the Core Interchange Fonts. These fonts are available on the AS/400, and on all the other IBM platforms that support PSF.

These fonts are provided on the AS/400 in a very inexpensive product, 5799-FDK. On all other platforms, they are shipped as standard with PSF. If you use these fonts you can guarantee that they will be available on the target PSF system.

Note: The IBM AFP Font Collection for IBM Operating Systems (Announcement ZP94-0759) will replace the Core Interchange PRPQ in March, 1995.

The Core Interchange Fonts include Courier, Helvetica** and Times New Roman**, in many sizes, weights, and styles.

If you need to use a font other than those available as Core Interchange Fonts, then it is very likely to be available in Adobe** Type 1 format from a font supplier. The Type Transformer part of the PSF/2 product will allow you to create fonts for use on VM, MVS and the AS/400. Chapter 3 of *AS/400 Printing III*, GG24-4028, contains more detail on the use of PSF/2 Type Transformer.

2.6.6 Spooled File Status

When a spooled file is sent to a remote output queue, its initial status is likely to be either RDY or DFR. The manual *AS/400 Printer Device Programming - Version 3*, SC41-3713, gives a complete list of the different values for the spooled file status. Here we are just discussing those statuses that are of particular interest to remote system printing.

The status DFR is new with Version 3.0 Release 1.0 and is used to hold spooled files which exceed the number of pages defined for printing at this time of day. This function is enabled using the new MAXPAGES parameter of the CRTOUTQ command. The use of this parameter is discussed in detail in Chapter 3, “Printer Load Balancing” on page 89.

When a spooled file is being sent to the target VM or MVS system its status changes to SND. The file will only remain in SND status until the AS/400 has sent the file. The AS/400 does not wait to receive confirmation messages from MVS or VM before deleting or saving the spooled file. The spooled file will be deleted or saved depending upon the value of the SAVE spooled file attribute.

You can look at the SNA Distribution Log to see the messages associated with the transmission. Figure 33 shows the messages associated with sending a spooled file to VM. The spooled file QSYSPRT, is spooled to the remote output queue V3TOVM. The file is owned by user ITSCID10 on the AS/400 system RCHASM02, and is to be sent to the same user ID on the VM system RCHVMW2 (RMTPRTQ parameter was set to *USER on the CRTOUTQ command).

```
                      Display Distribution Services Log

Type options, press Enter.
  5=Display details

    Function  Entry  ------Logged------                ----Originator----  Seq
Opt   Type    Type   Date      Time      Job Name     User ID   Address   NBR
      *RTR    *NRM    7/14/94  11:56:20  QMSF         QNETSPLF  RCHASM02  0001
      *SND    *NRM    7/14/94  11:56:24  RCHAS008     QNETSPLF  RCHASM02  0001
      *ORG    *NRM    7/14/94  11:56:29  V3TOVM       QNETSPLF  RCHASM02  0001
      *RTR    *NRM    7/14/94  11:57:23  QMSF         SYSTEM    RCHVMW2   0002
      *ARV    *NRM    7/14/94  11:57:28  QNFTP        SYSTEM    RCHVMW2   0002
      *RCV    *NRM    7/14/94  11:57:29  RCHAS00800   SYSTEM    RCHVMW2   0002
```

Figure 33. Example of Messages Returned to SNADS Log when Sending to VM

These message do not contain any specific information but they do indicate a successful transmission.

In the following example the transmission was not successful because the spooled file owner QSECOFR on the AS/400 system RCHASM02 does not exist as a user ID on the target VM system RCHVMW2. Figure 34 shows you the messages returned to the SNA Distribution Log when the transmission is unsuccessful. More detail can be found in the QNETSPLF message queue, which is shown in Figure 35 on page 64.

```
                      Display Distribution Services Log

Type options, press Enter.
  5=Display details

    Function  Entry  ------Logged------                ----Originator----  Seq
Opt   Type    Type   Date      Time      Job Name     User ID   Address   Nbr
      *RCV    *ERR    7/14/94  11:59:56  RCHAS00800   REROUTE   RCHVMW2   6111
      *RCV    *ERR    7/14/94  12:06:10  RCHAS00800   REROUTE   RCHVMW2   6111
      *RCV    *ERR    7/14/94  12:12:25  RCHAS00800   REROUTE   RCHVMW2   6111
      *RCV    *ERR    7/14/94  12:18:43  RCHAS00800   REROUTE   RCHVMW2   6111
```

Figure 34. Example of SNADS Log for an Unsuccessful Transmission

Note: In the examples shown, the AS/400 system RCHAS008 is being used as a gateway, so you can see some messages which refer to this system.

```
                              Display Messages
                                                        System:   RCHASM02
 Queue . . . . . :   QNETSPLF                Program . . . . :   *DSPMSG
   Library . . . :     QUSRSYS                 Library . . . :
 Severity  . . . :   00                      Delivery  . . . :   *HOLD

 Type reply (if required), press Enter.
   Spooled file QSYSPRT received for user ITSCID10 RCHAS008.
   From  . . . : SYSTEM RCHVMW2   07/14/94 11:57:27
      User QSECOFR not in CP directory -- file (0001) enqueued on link
     *NOTHERE
```

Figure 35. Example of QNETSPLF Message Queue for an Unsuccessful Transmission

2.7 V3R1 OS/400 to PSF/2

Table 5 outlines the possible combinations for four of the parameters used in the CRTOUTQ command to establish a remote printing connection with a PSF/2 system. Following the table we will discuss the various setup options that are valid and the restrictions which apply.

Table 5. Valid and Invalid Configurations for Sending from V3R1 OS/400 to PSF/2

Data Stream Type	Destination Type	Connection Type	Transform	Comments
*SCS	*PSF2	*SNA		Not Supported
*IPDS	*PSF2	*SNA		Not Supported
*AFPDS	*PSF2	*SNA		Not Supported
*USERASCII	*PSF2	*SNA		Not Supported
*SCS	*PSF2	*IP	*YES or *NO	Supported
*IPDS	*PSF2	*IP		Not Supported - Note 1
*AFPDS	*PSF2	*IP	*YES or *NO	Supported - Notes 2 and 3
*USERASCII	*PSF2	*IP	*YES or *NO	Supported - Note 3

Note:

1. An *IPDS spooled file can be sent to a PSF/2 using the Distributed Print Function (DPF) of PSF/2. Being a subset of the full Systems Application Architecture* IPDS, the AS/400 will first convert this file to AFPDS, and then PSF/400 is required to create a full IPDS data stream which is sent to PSF/2.

   The DPF function of PSF/2 does not allow the use of printer resident fonts, so if the *IPDS spooled file contains references to fonts, font substitution will occur on the AS/400, and the resulting AS/400 fonts to be downloaded may differ from those specified in the original file. Appendix D of the manual *AS/400 Printer Device Programming - Version 3*, SC41-3713 contains a list of tables used for font substitution on the AS/400.

2. If the AFPDS spooled file uses any resources, such as overlays, page segments or host resident fonts, these resources must exist on the target system if they are to be included in the printed output. The AS/400 does not insert resources in the spooled file before sending the file to the target system.

3. The setting for the Transform parameter is always ignored; no transform occurs.

You will notice from Table 5 that the communications protocol must be TCP/IP, which requires the IBM TCP/IP Connectivity Utilities/400 Version 3 (5763-TC1) licensed program product to be installed on the AS/400 and the TCP/IP product for OS/2.

Note:

Although this chapter is about PSF/2, and the value used in the Remote system parameter of the output queue description is *PSF2, you could use this information for sending AS/400 spooled files to an OS/2 system running only TCP/IP and LPD. PSF/2 adds additional function to this environment.

This connection does not use the DPF function of PSF/2, nor it require PSF/400 to be installed on the AS/400.

Only *SCS, *AFPDS and *USERASCII spooled files can be sent to PSF/2 in this way. It is also important to understand that *USERASCII does not imply that the data stream is ASCII. The ASCII data stream has to be coded by the application. This data stream type simply indicates that the data stream will not be examined or validated by the AS/400.

2.7.1 Setup

It is not the intention of this publication to explain how to establish the required hardware connections and software definitions for TCP/IP to enable communications between the two systems. The manual *AS/400 TCP/IP Configuration and Reference - Version 3*, SC41-3420, provides additional information to assist with these configuration settings.

To use TCP/IP, the source AS/400 must have the licensed program IBM TCP/IP Connectivity Utilities/400 Version 3 (5763-TC1) installed, and the target PS/2 must have TCP/IP 2.0 for OS/2 installed. Line, controller, and device descriptions have to be defined on the AS/400, and TCP/IP has to be configured for OS/2. The manuals *AS/400 TCP/IP Configuration and Reference - Version 3*, SC41-3420, and *IBM TCP/IP 2.0 for OS/2: Installation and Administration*, SC31-6075, can help you with the setup and configuration.

Once the initial setup is completed, create a remote output queue on the AS/400 system, and ensure a Line Printer Daemon (LPD) is running on the PS/2.

2.7.2 Using the CRTOUTQ Command to Send to PSF/2

Once the physical connections have been established, the remote output queue can be created using the CRTOUTQ command. The important parameters for this command and the values appropriate for sending spooled files to a PSF/2 system are described in detail in the list below.

OUTQ The qualified name of the output queue being created.

RMTSYS This parameter defines the remote system to which the spooled file will be sent when a remote writer is started. Valid values for this parameter when sending to a PSF/2 system are:

***INTNETADR** This value notifies the AS/400 to use the Internet address specified on the INTNETADR parameter. The INTNETADR parameter will only be prompted if this value is specified.

name This is the name of the target system to which the spooled files are to be sent.

RMTPRTQ This parameter defines the printer queue on the remote PSF/2 system to which the spooled files will be sent by the remote writer. The only permitted value is the name of a valid printer queue on the target PSF/2 system.

A quick way of determining the names of valid printer queues on an OS/2 system is by issuing the DIR command from the \SPOOL directory.

AUTOSTRWTR This parameter value specifies the number of remote writers that are started automatically by the source system, at the time the remote output queue is created. Valid values are *NONE, or a number between 1 and 10.

The names of the remote writers started automatically will use the first 9 characters of the remote output queue name, followed by a single numeric character from 1 to 0. The first remote writer started to remote output queue JOHN will be named JOHN1, the second JOHN2, up to JOHN0 for the tenth.

Chapter 3, “Printer Load Balancing” on page 89 discusses the new function of Version 3.0 Release 1.0 which allows up to 10 printers to be attached to a single output queue.

Starting multiple remote writers to a remote output queue can be useful for handling large numbers of spooled files more quickly. If you do start more than one writer, make sure you have more than one Line Printer Daemon (LPD) defined on the target PS/2. Otherwise, you will still be restricted to sending one spooled file at a time.

CNNTYPE This parameter specifies the type of communications protocol being used to send spooled files from the AS/400 to the PSF/2 system. The only valid value when the target system is PSF/2 is *IP.

DESTTYPE The value of this parameter when sending files to a PSF/2 system must be *PSF2.

TRANSFORM The value of this parameter tells the source AS/400 whether or not to use the host print transform function to transform a spooled file of device type *SCS to ASCII before sending to the remote AS/400.

The value *YES is only used if the spooled file has a device type of *SCS *and* the communications protocol is TCP/IP, so CNNTYPE(*IP) is specified. It is therefore recommended that this parameter is set to *YES. For any spooled file which is not SCS, this parameter will be ignored, and the host print transform will not be called.

If the host print transform is to be used, then values must be provided for the parameters MFRTYPMDL (Manufacturer Type and Model) and WSCST (Workstation Customization Object). These two parameters are only prompted when TRANSFORM(*YES) is specified. A detailed description of the host print transform function can be found in Chapter 7 of *AS/400 Printing III*, GG24-4028.

Chapter 6, “Advanced Host Print Transform Customization” on page 137 also discusses the host print transform function and provides detailed information on how to create or edit a Workstation Customization Object. You may wish to do this if your ASCII printer is not supported by the host print transform, or if you wish to modify the support which the host print transform provides for your printer.

MFRTYPMDL This parameter will only be prompted if TRANSFORM(*YES) was specified above. It is used with the host print transform to specify the make and model of ASCII printer to which the spooled file should be sent. Since the PSF/2 system can accept an ASCII data stream and convert the file to any of its supported output data streams, you should specify a printer with at least equal function to the intended target printer, for example IBM3916HP.

WSCST This parameter is only prompted if *YES is specified on the TRANSFORM parameter. The use of a workstation customization object is particularly useful to change or add values used by the host print transform. In particular, you may need to create a new workstation customization object to support an optional feature on the printer, such as duplex, or to change the code page mapping.

Details on how to use a workstation customization object can be found in Chapter 6, “Advanced Host Print Transform Customization” on page 137.

INTNETADR The value of this parameter is the Internet address of the target system running PSF/2, specified in the form *nnn.nnn.nnn.nnn*. It will only be prompted if the value of the remote system parameter (RMTSYS) is set to *INTNETADR.

2.7.3 Starting a Remote Printer Writer

If you did not specify that at least one remote writer should be started automatically when you created the remote output queue, then you must now issue the start remote writer command (STRRMTWTR) to initiate the sending of spooled files from the remote output queue to PSF/2. Chapter 4 of the manual *AS/400 Printer Device Programming - Version 3*, SC41-3713, contains a detailed description of the start remote writer command.

Remote writers have a writer type of *RMT. Local printer writers have a writer type of *PRT. If you issue the command WRKWTR without changing the default value for the WTR parameter, you will only see a list of the writers with a type of *PRT. To see a list containing remote writers, you must specify WRKWTR WTR(*ALL). However, specifying WTR(*ALL) will only show you started writers. It does not give you a list of every writer in the system.

2.7.4 Examples

The example in Figure 36 on page 68 shows the parameter values for the CRTOUTQ command to send spooled files from the remote output queue ASTOPSF2 to the printer queue PRT4019 on the system running PSF/2.

Note: If the PSF/2 printer queue name contains lowercase characters, you must enclose the name in single quotes when you specify it on the CRTOUTQ command.

It must be remembered that if the spooled file to be sent to the remote output queue has a device type of *AFPDS and it uses AFP resources such as fonts, overlays and page segments, then these resources must be resident on the IBM PS/2 and loaded into the PSF/2 resource libraries.

```
                         Create Output Queue (CRTOUTQ)

 Type choices, press Enter.

 Output queue . . . . . . . . . . > ASTOPSF2      Name
   Library  . . . . . . . . . . . >   QUSRSYS     Name, *CURLIB
 Maximum spooled file size:
   Number of pages  . . . . . . .   *NONE         Number, *NONE
   Starting time  . . . . . . . .                 Time
   Ending time  . . . . . . . . .                 Time
               + for more values
 Order of files on queue  . . . .   *FIFO         *FIFO, *JOBNBR
 Remote system  . . . . . . . . . > *INTNETADR
 Remote printer queue . . . . . . > PRT4019
 Writers to autostart . . . . . .   *NONE         1-10, *NONE
 Queue for writer messages  . . .   QSYSOPR       Name
   Library  . . . . . . . . . . .     *LIBL       Name, *LIBL, *CURLIB
 Connection type  . . . . . . . . > *IP           *SNA, *IP
 Destination type . . . . . . . . > *PSF2         *OS400, *OS400V2, *PSF2
 Transform SCS to ASCII . . . . .   *YES          *YES, *NO
 Manufacturer type and model  . . > *IBM4019
 Internet address . . . . . . . .   '9.5.69.287     '
 Text 'description' . . . . . . .   Send to 4019 attached to PSF/2
                                                                      Bottom
 F3=Exit   F4=Prompt   F5=Refresh   F10=Additional parameters   F12=Cancel
 F13=How to use this display        F24=More keys
```

Figure 36. Example of CRTOUTQ Command for Sending to PSF/2

2.7.5 Operation and Usage

As you can see from Table 5 on page 64 only three types of spooled files can be sent to PSF/2: *SCS, *AFPDS, and *USERASCII.

Files in SCS format must use the host print transform to convert them to ASCII before they can be sent successfully to PSF/2. PSF/2 cannot accept the SCS data stream.

Files with a device type of *USERASCII must already be in ASCII format and they are sent to PSF/2 without conversion, and without being examined or validated by the AS/400.

The creation of a spooled file with the device type of *AFPDS allows the application programmer to make use of many printer file functions and DDS keywords which can only be used with this device type.

The remote print function can be very useful at installations where PSF/2 is installed as a print server. Spooled files can be sent from the AS/400, and take advantage of the benefits of Advanced Function Printing, without the need to install PSF/400 on the AS/400. However, if the AFPDS spooled file uses AFP

resources, such as overlays, page segments, and fonts, to enhance the presentation of the printed output, these resources must be resident in the PSF/2 resource libraries.

2.7.5.1 Migrating Resources to PSF/2

To migrate an overlay or page segment from the AS/400 to PSF/2, you must first use the CVTOVLPFM command (for an overlay) or the CVTPAGSPFM command (for a page segment) to convert the AS/400 object to a physical file. When using this command you must ensure that the format of the data is specified as DTAFMT(*CONTINUOUS) to ensure the resource is in the correct format for the PS/2.

The resulting physical file member can be copied to a shared folder using the CPYTOPCD command, and sent to the PS/2 using Client Access/400.

Finally the resource must be added to the appropriate PSF/2 resource library. There is a good explanation of how to do this on page 5-10 of *AS/400 Printing III*, GG24-4028.

2.7.5.2 Managing Font Resources

It is not possible to transfer an AS/400 font resource to PSF/2, but you do have to ensure that any font resources which you wish to use with your output are stored in the PSF/2 font resource library.

The easiest way to ensure this is to use the Core Interchange Fonts. These fonts are available on the AS/400, and on all the other IBM platforms that support PSF.

These fonts are provided on the AS/400 in a very inexpensive product, 5799-FDK. On all other platforms, they are shipped as standard with PSF. If you use these fonts you can guarantee that they will be available on the target PSF/2 system.

Note: The IBM AFP Font Collection for IBM Operating Systems (Announcement ZP94-0759) will replace the Core Interchange PRPQ in March, 1995.

The Core Interchange Fonts include Courier, Helvetica and Times New Roman, in many sizes, weights and styles.

If you need to use a font other than those available as Core Interchange Fonts, then it is very likely to be available in Adobe Type 1 format from a font supplier. The Type Transformer part of the PSF/2 product will allow you to create fonts for use on both PSF/2 and the AS/400. Chapter 3 of *AS/400 Printing III*, GG24-4028, contains more detail on the use of PSF/2 Type Transformer.

2.7.6 Spooled File Status

When a file is spooled to a remote output queue, its initial status is likely to be either RDY or DFR. The manual *AS/400 Printer Device Programming - Version 3*, SC41-3713, gives a complete list of the different values for the spooled file status. Here we are just discussing those statuses that are of particular interest to remote system printing.

The status DFR is new with Version 3.0 Release 1.0 and is used to hold spooled files which exceed the number of pages defined for printing at this time of day. This new function is enabled using the new MAXPAGES parameter of the CRTOUTQ command. The use of this parameter is discussed in detail in Chapter 3, “Printer Load Balancing” on page 89.

When a spooled file is being sent to the remote PSF/2 its status changes to SND.

The spooled file will be deleted or saved depending upon the value of the SAVE spooled file attribute as soon as the AS/400 has completed sending the file to PSF/2. There will be no confirmation that the spooled file has actually arrived successfully and will be printed. For this reason it is always a good idea to specify SAVE(*YES) for spooled files which are to be sent to another system using TCP/IP.

2.8 V3R1 OS/400 to PSF/6000

Table 6 outlines the possible combinations for four of the parameters used in the CRTOUTQ command to establish a remote printing connection with a PSF/6000 system. Following the table we will discuss the various setup options that are valid and the restrictions which apply.

Table 6. Valid and Invalid Configurations for Sending from V3R1 OS/400 to PSF/6000

Data Stream Type	Destination Type	Connection Type	Transform	Comments
*SCS	*OTHER	*SNA		Not Supported
*IPDS	*OTHER	*SNA		Not Supported
*AFPDS	*OTHER	*SNA		Not Supported
*USERASCII	*OTHER	*SNA		Not Supported
*SCS	*OTHER	*IP	*YES or *NO	Supported
*IPDS	*OTHER	*IP		Not Supported
*AFPDS	*OTHER	*IP	*YES or *NO	Supported - Notes 1 and 2
*USERASCII	*OTHER	*IP	*YES or *NO	Supported - Note 2

Note:

1. If the AFPDS spooled file uses any resources, such as overlays, page segments or host resident fonts, these resources must exist on the target system if they are to be included in the printed output. The AS/400 does not insert resources in the spooled file before sending the file to the target system.
2. The setting for the Transform parameter is always ignored; no transform occurs.

You will notice from Table 6 that the communications protocol must be TCP/IP when sending spooled files to an IBM AIX Print Services Facility/6000 system using remote system printing. The AS/400 requires the IBM TCP/IP Connectivity Utilities/400 Version 3 (5763-TC1) licensed program product to be installed. However TCP/IP is a standard function included in the IBM AIX* operating system.

Only *SCS, *AFPDS, and *USERASCII spooled files can be sent to PSF/6000 using remote system printing. PSF/6000 does not support the Distributed Printing Function (DPF) like PSF/2, so there is no way to send IPDS files from the AS/400.

It is also important to understand that *USERASCII does not imply that the data stream is ASCII. The ASCII data stream has to be coded within the application. This data stream type simply indicates that the data stream will not be examined or validated by the AS/400.

2.8.1 Setup

It is not the intention of this publication to explain how to establish the required hardware and software connections to enable remote printing to an IBM RISC System/6000 using TCP/IP.

To use TCP/IP the AS/400 must have the licensed program IBM TCP/IP Connectivity Utilities/400 Version 3 (5763-TC1) installed. Line, controller, and device descriptions have to be defined on the AS/400 and TCP/IP has to be configured on the IBM RISC System/6000. The manuals *AS/400 TCP/IP Configuration and Reference - Version 3*, SC41-3420, and *IBM AIX Operating System: TCP/IP User's Guide*, SC23-2309, will help with the necessary configurations.

Once the initial setup is completed, create a remote output queue on the AS/400 system and ensure a Line Printer Daemon (LPD) is running on the IBM RISC System/6000. The following section will help you to create the remote output queue.

2.8.2 Using the CRTOUTQ Command to Send to PSF/6000

Once the physical connections have been established the remote output queue can be created, using the CRTOUTQ command. The important parameters for this command and the values appropriate for sending spooled files to an IBM AIX Print Services Facility/6000 system are described in detail in the list below.

OUTQ The qualified name of the output queue being created.

RMTSYS This parameter defines the remote system to which the spooled file will be sent when a remote writer is started. Valid values for this parameter when sending to an IBM AIX Print Services Facility/6000 system are:

- ***INTNETADR** This value notifies the AS/400 to use the Internet address specified on the INTNETADR parameter. The INTNETADR parameter will only be prompted if this value is specified.
- **name** This is the name of the target system to which the spooled files are to be sent.

  Remember that names on the IBM RISC System/6000 system are case sensitive, so this name must be enclosed in single quotes if any part of the name is in lowercase. Without the single quotes, the AS/400 will capitalize the name.

RMTPRTQ This parameter defines the printer queue on the remote IBM AIX Print Services Facility/6000 system to which the spooled files will be sent by the remote writer. The only permitted value is the name of a valid printer queue on the target IBM AIX Print Services Facility/6000 system.

Remember that names on the IBM RISC System/6000 system are case sensitive, so this name must be enclosed in single quotes if any part of the name is in lowercase. Without the single quotes, the AS/400 will capitalize the name.

AUTOSTRWTR This parameter value specifies the number of remote writers that are started automatically by the source system at the time the remote output queue is created. Valid values are *NONE, or a number between 1 and 10.

The names of the remote writers started automatically will use the first 9 characters of the remote output queue name, followed by a single numeric character from 1 to 0. The first remote writer started to remote output queue JOHN will be named JOHN1, the second JOHN2, up to JOHN0 for the tenth.

Chapter 3, “Printer Load Balancing” on page 89 discusses the new function of Version 3.0 Release 1.0 which allows up to 10 printers to be attached to a single output queue.

Starting multiple remote writers to a remote output queue can be useful for handling large numbers of spooled files more quickly. If you do start more than one writer, make sure you have more than one Line Printer Daemon (LPD) running on the target IBM RISC System/6000. Otherwise, you will still be restricted to sending one spooled file at a time.

CNNTYPE This parameter specifies the type of communications protocol being used to send spooled files from the AS/400 to the IBM AIX Print Services Facility/6000 system. The only valid value when the target system is an IBM AIX Print Services Facility/6000 is *IP.

DESTTYPE The value of this parameter when sending files to an IBM AIX Print Services Facility/6000 system must be *OTHER.

TRANSFORM The value of this parameter tells the source AS/400 whether or not to use the host print transform function to transform a spooled file of device type *SCS to ASCII before sending to the remote AS/400.

The value *YES is only used if the spooled file has a device type of *SCS *and* the communications protocol is TCP/IP, so CNNTYPE(*IP) is specified. It is therefore recommended that this parameter is set to *YES. For any spooled file which is not SCS, this parameter will be ignored, and the host print transform will not be called.

If the host print transform is to be used, then values must be provided for the parameters MFRTYPMDL (Manufacturer Type and Model) and WSCST (Workstation Customization Object). These two parameters are only prompted when TRANSFORM(*YES) is specified. A detailed description of the host print transform function can be found in Chapter 7 of *AS/400 Printing III*, GG24-4028.

Chapter 6, “Advanced Host Print Transform Customization” on page 137 also discusses the host print transform function and provides detailed information on how to create or edit a Workstation Customization Object. You may wish to do this if your ASCII printer is not supported by the host print transform, or if you wish to modify the support which the host print transform provides for your printer.

MFRTYPMDL This parameter will only be prompted if TRANSFORM(*YES) was specified above. It is used with the host print transform to specify the make and model of ASCII printer to which the spooled file should be sent. Since the IBM AIX Print Services Facility/6000 system can accept an ASCII data stream and convert the file to any of its supported output data streams, you should specify a printer with at least equal function to the intended target printer, for example IBM3916HP.

WSCST This parameter is only prompted if *YES is specified on the TRANSFORM parameter. The use of a workstation customization object is particularly useful to change or add values used by the host print transform. In particular, you may need to create a new workstation customization object to support an optional feature on the printer, such as duplex, or to change the code page mapping.

Details on how to use a workstation customization object can be found in Chapter 6, “Advanced Host Print Transform Customization” on page 137.

INTNETADR The value of this parameter is the Internet address of the target system running IBM AIX Print Services Facility/6000, specified in the form *nnn.nnn.nnn*. It will only be prompted if the value of the remote system parameter (RMTSYS) is set to *INTNETADR.

2.8.3 Starting a Remote Printer Writer

If you did not specify that at least one remote writer should be started automatically when you created the remote output queue, then you must now issue the start remote writer command (STRRMTWTR) to initiate the sending of spooled files from the remote output queue to IBM AIX Print Services Facility/6000. Chapter 4 of the manual *AS/400 Printer Device Programming - Version 3*, SC41-3713, contains a detailed description of the start remote writer command.

Remote writers have a writer type of *RMT. Local printer writers have a writer type of *PRT. If you issue the command WRKWTR without changing the default value for the WTR parameter, you will only see a list of the writers with a type of *PRT. To see a list containing remote writers, you must specify WRKWTR WTR(*ALL). However, specifying WTR(*ALL) will only show you started writers. It will not give you a list of every writer in the system.

2.8.4 Examples

The first example in Figure 37 on page 74 shows the parameter values for the CRTOUTQ command to send spooled files from the remote output queue ASTORS to the printer queue psf3825 on the system running IBM AIX Print Services Facility/6000.

Note: If the IBM AIX Print Services Facility/6000 printer queue name contains lowercase characters, you must enclose the name in single quotes when you specify it on the CRTOUTQ command, as in this example in Figure 37 on page 74.

In this example we have set up TCP/IP communications and specified the address of the remote system using its Internet address.

It must be remembered that if the spooled file to be sent to the remote output queue has a device type of *AFPDS, and it uses AFP resources such as fonts, overlays and page segments, then these resources must be resident on the IBM RISC System/6000 and in the IBM AIX Print Services Facility/6000 resource libraries.

```
                         Create Output Queue (CRTOUTQ)

Type choices, press Enter.

Output queue . . . . . . . . . . > ASTORS        Name
  Library  . . . . . . . . . . . >   QUSRSYS     Name, *LIBL, *CURLIB
Maximum spooled file size:
  Number of pages  . . . . . . . .   *NONE        Number, *SAME, *NONE
  Starting time  . . . . . . . . .                 Time
  Ending time  . . . . . . . . . .                 Time
Order of files on queue  . . . .   *FIFO        *SAME, *JOBNBR, *FIFO
Remote system  . . . . . . . . . .   *INTNETADR    Character value, *SAME...
Remote printer queue . . . . . .   'psf3825'     Character value, *SAME...
Writers to autostart . . . . . .   *NONE        1-10, *SAME, *NONE
Queue for writer messages  . . .   QSYSOPR       Name, *SAME
  Library  . . . . . . . . . . . .     *LIBL       Name, *LIBL, *CURLIB
Connection type  . . . . . . . . .   *IP          *SNA, *IP, *SAME
Destination type . . . . . . . . .   *OTHER       *SAME, *OS400, *OS400V2...
Internet address . . . . . . . . .   '9.5.69.198     '
Text 'description' . . . . . . .   Send files to printer attached to PSF/6000
                                                                        Bottom
F3=Exit   F4=Prompt   F5=Refresh   F12=Cancel   F13=How to use this display
F24=More keys
```

Figure 37. Example of CRTOUTQ Command for Sending to PSF/6000

In the second example shown in Figure 38 on page 75 we have used the name of the IBM RISC System/6000 system rather than its Internet address to define the remote system on the CRTOUTQ command.

This is a typical example of the way you may decide to set up the parameters on the CRTOUTQ command. Since the name of the target printer is psf3935, we have also made this the name of the remote output queue on the AS/400. This makes it very easy for a user to send spooled output to the target printer.

We have also ensured that the name of the remote printer queue, psf3935 has been enclosed in single quotes to stop the AS/400 from capitalizing any lowercase characters in the name.

```
                         Create Output Queue (CHGOUTQ)

 Type choices, press Enter.

 Output queue . . . . . . . . . . > PSF3935       Name
   Library  . . . . . . . . . . . >   QUSRSYS     Name, *LIBL, *CURLIB
 Maximum spooled file size:
   Number of pages  . . . . . . .   *NONE         Number, *SAME, *NONE
   Starting time  . . . . . . . .                 Time
   Ending time  . . . . . . . . .                 Time
 Order of files on queue  . . . .   *FIFO         *SAME, *JOBNBR, *FIFO
 Remote system  . . . . . . . . .   RCHRS001      Character value, *SAME...
 Remote printer queue . . . . . .   'psf3935'     Character value, *SAME...
 Writers to autostart . . . . . .   *NONE         1-10, *SAME, *NONE
 Queue for writer messages  . . .   QSYSOPR       Name, *SAME
   Library  . . . . . . . . . . .     *LIBL       Name, *LIBL, *CURLIB
 Connection type  . . . . . . . .   *IP           *SNA, *IP, *SAME
 Destination type . . . . . . . .   *OTHER        *SAME, *OS400, *OS400V2...
 Text 'description' . . . . . . .   Send files to printer attached to PSF/6000
                                                                        Bottom
 F3=Exit   F4=Prompt   F5=Refresh   F12=Cancel   F13=How to use this display
 F24=More keys
```

Figure 38. Example of CRTOUTQ Command for Sending to PSF/6000

2.8.5 Operation and Usage

As you can see from Table 6 on page 70, only three types of spooled file can be send to IBM AIX Print Services Facility/6000: *SCS, *AFPDS, and *USERASCII.

Files in SCS format must use the host print transform to convert them to ASCII before they can be sent successfully to IBM AIX Print Services Facility/6000. IBM AIX Print Services Facility/6000 cannot accept the SCS data stream.

Files with a device type of *USERASCII must already be in ASCII format and they are sent to IBM AIX Print Services Facility/6000 without conversion, and without being examined or validated by the AS/400.

The creation of a spooled file with the device type of *AFPDS allows the application programmer to make use of many printer file functions and DDS keywords which can only be used with this device type.

The remote print function can be very useful at installations where IBM AIX Print Services Facility/6000 is installed as a print server. Spooled files can be sent from the AS/400, and take advantage of the benefits of Advanced Function Printing, without the need to install PSF/400 on the AS/400.

2.8.5.1 Migrating Resources to PSF/6000

To migrate an overlay or page segment from the AS/400 to IBM AIX Print Services Facility/6000 you must first use the CVTOVLPFM command (for an overlay) or the CVTPAGSPFM command (for a page segment) to convert the AS/400 object to a physical file.

Before sending the new physical file member, you must ensure that the physical file has authority *ALL for *PUBLIC users. If you do not do this, then the overlay will not be given general read access when it reaches the PSF/6000 resource library.

You can use the STRTCPFTP command to initiate a file transfer environment between the AS/400 and the RS/6000. Before sending the file, issue the command `BINARY` to ensure the file is not converted to ASCII by the file transfer process. You can then issue the command:

```
PUT LIBRARY/FILENAME.MEMBER /usr/lpp/psf/reslib/MEMBER
```

Successful transmission is confirmed when a message is returned to your display showing the number of bytes which have been transferred.

The resulting physical file member can be sent to the IBM RISC System/6000 and loaded into the resource library of IBM AIX Print Services Facility/6000. Details of how to do this can be found in the manual *IBM AIX Print Services Facility/6000 Print Submission*, S544-3878.

2.8.5.2 Managing Font Resources

It is not possible to transfer an AS/400 font resource to IBM AIX Print Services Facility/6000 but you do have to ensure that any font resources which you wish to use with your output are stored in the IBM AIX Print Services Facility/6000 font resource library.

The easiest way to ensure this is to use the Core Interchange Fonts. These fonts are available on the AS/400, and on all the other IBM platforms that support PSF.

These fonts are provided on the AS/400 in a very inexpensive product, 5799-FDK. On all other platforms, they are shipped as standard with PSF. If you use these fonts you can guarantee that they will be available on the target IBM AIX Print Services Facility/6000 system.

Note: The IBM AFP Font Collection for IBM Operating Systems (Announcement ZP94-0759) will replace the Core Interchange PRPQ in March, 1995.

The Core Interchange Fonts include Courier, Helvetica and Times New Roman, in many sizes, weights and styles.

If you need to use a font other than those available as Core Interchange Fonts, then it is very likely to be available in Adobe Type 1 format from a font supplier. The Type Transformer part of the PSF/2 product will allow you to create fonts for use on both PSF/6000 and the AS/400. Chapter 3 of *AS/400 Printing III*, GG24-4028, contains more detail on the use of PSF/2 Type Transformer.

2.8.6 Spooled File Status

When a file is spooled to a remote output queue, its initial status is likely to be either RDY or DFR. The manual *AS/400 Printer Device Programming - Version 3*, SC41-3713, gives a complete list of the different values for the spooled file status. Here we are just discussing those statuses that are of particular interest to remote system printing.

The status DFR is new with Version 3.0 Release 1.0 and is used to hold spooled files which exceed the number of pages defined for printing at this time of day. This new function is enabled using the new MAXPAGES parameter of the

CRTOUTQ command. The use of this parameter is discussed in detail in Chapter 3, “Printer Load Balancing” on page 89.

When a spooled file is being sent to the remote IBM AIX Print Services Facility/6000 its status changes to SND.

The spooled file will be deleted or saved depending upon the value of the SAVE spooled file attribute as soon as the AS/400 has completed sending the file to IBM AIX Print Services Facility/6000. There will be no confirmation that the spooled file has actually arrived successfully and will be printed. For this reason it is always a good idea to specify SAVE(*YES) for spooled files which are to be sent to another system using TCP/IP.

2.8.7 User Print Information

User print information currently contains a single parameter that allows a user to define up to 100 characters of user-defined text. Whenever that user creates a spooled file, that user-defined text is saved with the spooled file as one of the attributes.

On an AS/400, this user-defined text can be retrieved and used by a CL program.

However, in the context of remote printing, this user-defined text can be used, when sending a spooled file to VM or MVS, to help build NJE header and trailer records.

The VM/MVS bridge contains a user exit to allow you to call a user program. That program can modify the NJE header and trailer records, using values passed to the program from the user-defined text parameter of the user print information.

This section just shows you how to create and change the user-defined text. 2.9, “Using the VM/MVS Bridge Outbound Exit Point with Remote Printing” on page 78 explains how the VM/MVS bridge user exit works, and how to set up and use the exit to modify the NJE records.

2.8.7.1 Commands Associated with User Print Information

There is no create command associated with user print information. If no user print information exists it can be created with the CHGUSRPRTI command. Figure 39 on page 78 gives an example of the CHGUSRPRTI screen. If no previous user print information existed, the user-defined text will display *BLANK. If user-defined text had been previously entered, it will be displayed. In either situation, over-typing with the new information will cause the user print information to be changed.

```
                        Change User Print Info (CHGUSRPRTI)

 Type choices, press Enter.

 User . . . . . .  ITSCID10      Name, *CURRENT
 User-defined text  . . . . . .  The user print information can be up
to 100 characters of textual information


                                                                    Bottom
 F3=Exit   F4=Prompt   F5=Refresh   F12=Cancel   F13=How to use this display
 F24=More keys
```

Figure 39. Example of CHGUSRPRTI Screen

Note: Currently user print information is made up of user-defined text. In the future there could be other parameters added to user print information. However, it is only the user-defined text that becomes an attribute of a spooled file, and only user-defined text that is used in remote printing to pass NJE header information to the VM/MVS bridge.

Two other commands are associated with user print information. The DSPUSRPRTI command displays the user print information for a specified user, and the RTVUSRPRTI command can be used in a CL program to retrieve the user print information associated with a specific user.

We will not attempt to discuss the use of the RTVUSRPRTI here, since it is not relevant to remote system printing. It is worth noting that when sending a spooled file to another AS/400 using remote system printing, the spooled file attributes are all preserved, so the user-defined text could be retrieved by a CL program on either the source or the target AS/400.

2.9 Using the VM/MVS Bridge Outbound Exit Point with Remote Printing

The VM/MVS Bridge contains an NJE outbound exit point which allows the NJE header and trailer records built automatically by the VM/MVS Bridge program, to be modified by a user specified program, using data that has been defined using the user-defined text of the user print information.

In this section we will explain how to make use of the exit point, the user print information, and a user specified program to modify the NJE header and trailer records used to send a spooled file from an AS/400 to a VM or MVS system. In particular, the section will cover the following:

- What are NJE header and trailer records
- What information do they contain which you may wish to modify
- How the VM/MVS bridge is used to create NJE headers
- How the VM/MVS Bridge NJE outbound exit point works
- How to set up the exit point to call your program

2.9.1 NJE Header and Trailer Records

An NJE job contains the data to be transmitted together with control records to control and identify the data being transmitted.

There are three control records, sometimes known as the NJE headers.

- Job Header Record

  The job header contains many fields which are necessary to identify and define the job characteristics, such as job number, job name, and job class together with accounting and security information. The job header information is mandatory for every NJE job.

- Data Set Header Record

  The data set header record is optional and allows you to define the characteristics for particular data sets which may exist within the NJE job. For spooled files the parameters required to control output processing are specified in the data set headers. Examples of the printing related fields are data stream type, duplex, bin selection, and number of copies. If you specified an FCB on the CRTOUTQ command, then the FCB name will appear in one of the data set header fields.

- Job Trailer Record

  The job trailer record is mandatory for all NJE jobs and contains mainly statistical information about the job, such as priority, date and time stamps, and the number of print lines.

Full details of all the fields contained in these NJE headers can be found in Chapter 2 of the manual *Network Job Entry Formats and Protocols*, SC23-0070. This manual describes each field, and also shows you the values that the AS/400 will use for each. Some of the fields will be set to a default value that the AS/400 always uses, and others will be set to values based on the parameters defined for the remote output queue.

Any of these values can now be changed by using the VM/MVS Bridge NJE outbound exit point, and the user-defined text from the user print information.

2.9.2 The VM/MVS Bridge and the NJE Outbound Exit Point

The diagram in Figure 40 on page 80 shows the component jobs for the VM/MVS bridge. For each node defined in the SNA Distribution Services Log, there are three jobs defined on the AS/400 system.

- The sender job, RCHVM1 in the example.

  This takes files to be transmitted to the associated VM or MVS node and builds the NJE job headers, data set headers, and job trailers, according to standard settings used by the AS/400 VM/MVS bridge, and parameter values defined for the remote output queue. Once the NJE headers and trailer have been built, the file to be transmitted is passed to the line driver job for transmission to the remote system.

- The line driver job, LDRCHVM1 in the example.

  The line driver job is responsible for receiving and transmitting files and messages, using the NJE protocol from and to a remote S/390 system. In the context of printing, we are not interested in receiving files. It is the line driver job that contains an outbound exit point that provides the interface to

a user specified exit program. This user exit program can modify the NJE header and trailer records prior to transmitting the job to the remote system.

- The receiver job, RCRCHVM1 in the example.

  The receiver job takes incoming files and messages transmitted to the AS/400 from the remote system and removes the NJE headers and trailers.

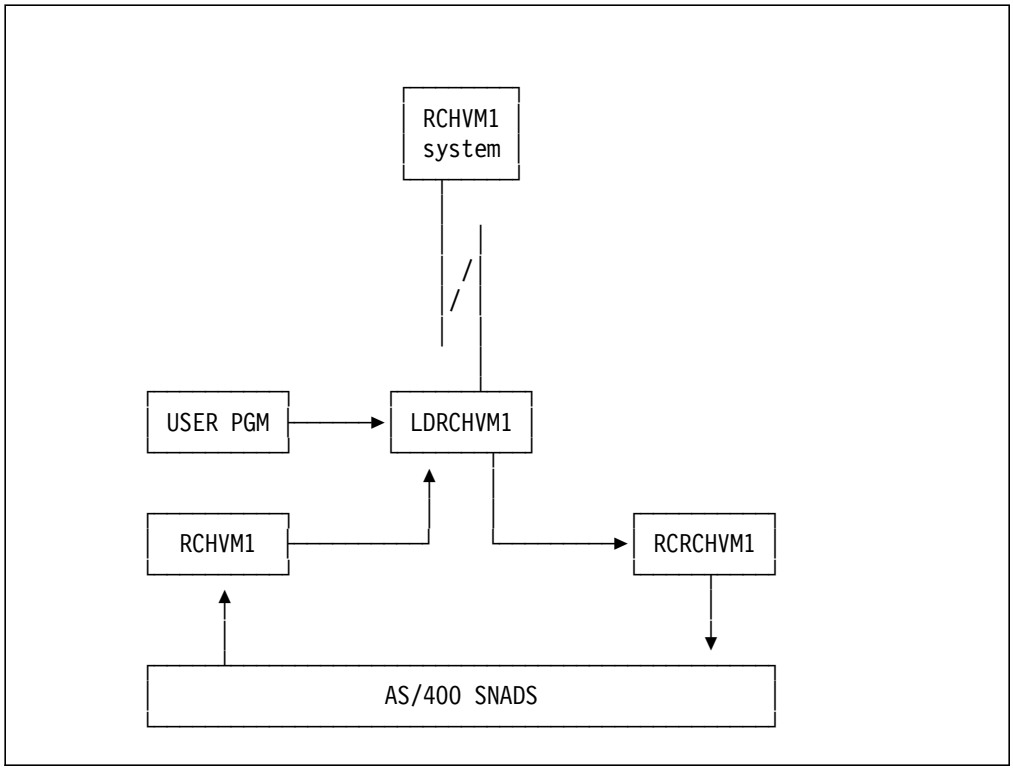

Figure 40. Elements of the VM/MVS Bridge

The user specified exit program can only modify the NJE headers, it cannot modify the data. The NJE outbound exit point specifies the parameters that will be passed to the user exit program, and it will only make the NJE header and trailer records available to the program for modification.

Only one record at a time can be passed to the exit program. If you wish to modify fields in all three of the NJE records, the exit program will be called three times.

The parameters that will be passed to the user specified exit program are defined as follows:

1. Format Name

   This input parameter contains the name of the NJE Outbound information format. The name of this format is NJEO0100.

2. Distribution Information

   This is an input parameter defining the specific type of distribution being processed, and the new data values to be substituted. The distribution information is broken down into a sub-structure, which is discussed later. The distribution information contains the distribution type (this is 02 for spooled files), the record type to modify, and the user-defined text from the user print information.

3. Input data buffer

   This input parameter contains the existing NJE record data. Only one record will be passed to the program. The format of this data is defined in the manual *Network Job Entry Formats and Protocols*, SC23-0070, and depends upon the NJE record type field in the distribution information structure.

4. Input data buffer length

5. Output data buffer

   This is an output parameter. Once the NJE header and trailer records have been modified by the user program, this parameter must be used by the exit program to return the NJE data to the line driver job for transmission to the VM or MVS system.

6. Output data buffer length

7. Length of data returned

   This output parameter defines the length of the data returned by the exit program. If the input record has not been modified by the program, the value of this field can be set to -1, to indicate to the VM/MVS Bridge to send the NJE record as built, without modification.

This format is described in detail in the manual *SNA Distribution Services - Version 3*, SC41-3410. We will not go into detail on the length and data type for the fields in this format.

2.9.2.1 Distribution Information Structure

The structure of the distribution information is outlined below.

- Length of structure
- Distribution type

  This describes the type of object being distributed. For spooled files the distribution type will always be specified as 02

- NJE record type

  This describes the type of NJE record being processed. The possible values are:

  01 - Job header

  02 - Dataset header

  03 - Job trailer

- Remote location name

  The name of the remote system to which the file is being sent.

- User print information

  This is where the user-defined text from the user print information is passed to the user specified program.

- User print information CCSID

  This is the coded character set identifier (CCSID) of the user-defined text associated with a spooled file.

This format is described in detail in the manual *SNA Distribution Services - Version 3*, SC41-3410. We have not gone into the detail of the length and data type for the fields in this format.

2.9.3 Exit Program Registration

The VM/MVS Bridge outbound exit point is automatically registered when the IBM Communications Utilities/400 Version 3 (5763-CM1) licensed program is installed. To register the user exit program for the exit point, the user must use the Add Exit Program command (ADDEXITPGM). Figure 41 shows an example of the information which should be provided for this command.

```
                        Add Exit Program (ADDEXITPGM)

Type choices, press Enter.

Exit point . . . . . . . . . . .   QIBM_QGW_NJEOUTBOUND
Exit point format  . . . . . . .   NJEO0100      Name
Program number . . . . . . . . .                 1-2147483647, *LOW, *HIGH
Program  . . . . . . . . . . . .   SETACCTINF    Name
  Library  . . . . . . . . . . .   QGPL          Name, *CURLIB
Text 'description' . . . . . . .   Exit program to set Accounting Information


                           Additional Parameters

Replace existing entry . . . . .   *NO           *YES, *NO
Create exit point  . . . . . . .   *NO           *YES, *NO
Exit program data:
  Coded character set ID . . . .   *NONE         Number, *NONE, *JOB
  Length of data . . . . . . . .   11            0-2048, *CALC
  Program data . . . . . . . . .   RCHVMSYS022
                                                                     Bottom
F3=Exit   F4=Prompt   F5=Refresh   F12=Cancel   F13=How to use this display
F24=More keys
```

Figure 41. Example of ADDEXITPGM Screen

In the example shown in Figure 41 you can see just how to register a user specified exit program to be called when a spooled file is sent to the remote system RCHVMSYS. You can see from the example that we have specified the following:

Exit Point Name:
The name of the NJE outbound exit point is "QIBM_QGW_NJEOUTBOUND".

Exit Point Format Name:
The exit point format name must be "NJEO0100".

Exit Program Number:
This parameter is not used.

Exit Program Name:
This parameter is user specified. In the example it is called QGPL/SETACCTINF.

Exit Program Data:
The exit program data must specify the remote location name, the distribution type, and the error processing indicator.

- The remote location name is RCHVMSYS

- The distribution type for a spooled file is 02.
- The error processing indicator is 2.

The error processing indicator can be 0, 1 or 2. Refer to the manual *SNA Distribution Services - Version 3*, SC41-3410, for a detailed explanation of this and all the parameters used in the ADDEXITPGM command.

The WRKREGINF command will allow you to display the exit point and work with exit programs. This command will also provide a route to the ADDEXITPGM command to register an exit program against the NJE outbound exit point.

2.9.4 Example of a User Exit Program to Modify NJE Accounting Information

The RPG language program on page 83 shows you an example of a user exit program to be run each time a spooled file is sent to a remote VM or MVS system. In this program we are changing the accounting information being passed to the remote system, and also changing the forms type from *STD to STANDARD.

You can see that the required parameters which will be passed to the program are defined, and program variables declared for them. These parameters are explained on page 80.

Next, program variables are declared that match the structure of the NJE job header and data set header. These are defined in detail in the manual *Network Job Entry Formats and Protocols*, SC23-0070.

Variables are also declared in the program for the NJE Nodal Message Record (NMR). The NMR record structure is used to transmit commands and messages, and a user exit program could be used to modify this record type in just the same way that the job header, data set header and job trailer records can be modified.

Finally in the example program we get to logic of the program, where the first eight characters of the user-defined text from the user print information is substituted into the NJE job header field NJHGROOM, and we substitute for any form type of *STD, the value STANDARD. The form type could be specified in either the NJHGFORM field in the job header record, or the NDHGFORM field in the data set header.

Notice that in the program we test to ensure the file is a spooled file (distribution information distribution type is 02), and if it is not we set the length of the returned data to -1. This value indicates to the NJE outbound exit point that the NJE records built by the VM/MVS Bridge sender job should be transmitted without modification.

```
H*******************************************************************
H*  PROGRAM: SETACCTINF  -  Set account Information               *
H*                                                                *
H*         This program acts as an exit program for the NJE00100  *
H*        format for the VM/MVS Bridge.                           *
H*                                                                *
H*        It will set the job header accounting info based on the *
H*        user-defined text of the user print information (for    *
H*        spooled files only).                                    *
H*                                                                *
H*        It is assumed that the first 8 characters in the user   *
H*        defined text is appropriate accounting information.     *
H*                                                                *
H*        It will also map the form type *STD to STANDARD and     *
H*        set the job name to the originating user id             *
H*                                                                *
```

```
H*****************************************************************
D*********************
D* Declare variables *
D*********************
DFormatName       S              8A
DInputBuf         S          32767A
DInputBufL        S              8B 0
DOutputBuf        S          32767A
DOutputBufL       S              8B 0
DRetDataL         S              8B 0
D*****************************************
D* Distribution information Data Structure *
D*****************************************
DDistInfo         DS
D DstInfL                        8B 0
D DstInfDt                       2A
D DstInfNt                       2A
D DstInfRl                       8A
D DstInfUPI                    100A
D DstInfUPIc                     8B 0
D************************
D* Job Header           *
D************************
DNJHG             DS         32767
D NJHLEN                         4B 0
D NJHFLAGS                       1A
D NJHSEQ                         1A
D*********************************
D* Job Header General Structure *
D*********************************
D NJHGJNAM               29     36A
D NJHGORGR               77     84A
D NJHGFORM              133    140A
D NJHGROOM              177    184A
D*************************
D* Data Header Structure *
D*************************
DNDHG             DS         32767
D NDHGFORM               65     72A
C*********************
C* Declare variables *
C*********************
C                   MOVE      *BLANK        FormatName        8
C                   MOVE      *BLANK        OutputBuf
C*********************
C* Main program      *
C*********************
C     *ENTRY        PLIST
C                   PARM                    FormatName
C                   PARM                    DistInfo
C                   PARM                    InputBuf
C                   PARM                    InputBufL
C                   PARM                    OutputBuf
C                   PARM                    OutputBufL
C                   PARM                    RetDataL
C     DstInfDt      IFNE      '02'                                        If not Spool file
C                   MOVE      -1            RetDataL
C                   ELSE
C     DstinfNt      CASEQ     '01'          JobHeader
C     DstinfNt      CASEQ     '02'          DataHeader
C                   CAS                     ByPass
C                   ENDCS
C                   END
C                   Return
C*********************************
C     JobHeader     BEGSR
C                   MOVEL     InputBuf      NJHG
C                   MOVEL     NJHGORGR      NJHGJNAM
C                   MOVEL     DstinfUPI     NJHGROOM
C     NJHGFORM      IFEQ      '*STD'
C                   MOVEL     'STANDARD'    NJHGFORM
C                   END
C                   MOVEL     NJHG          OutputBuf
C                   MOVE      InputBufL     RetDataL
C                   ENDSR
C*********************************
C     DataHeader    BEGSR
C                   MOVEL     InputBuf      NDHG
C     NDHGFORM      IFEQ      '*STD'
C                   MOVEL     'STANDARD'    NDHGFORM
C                   END
C                   MOVEL     NDHG          OutputBuf
C                   MOVE      InputBufL     RetDataL
```

```
C                   ENDSR
C*******************************
C     ByPass        BEGSR
C                   MOVE      -1            RetDataL
C                   ENDSR
```

2.10 Hints and Tips/Troubleshooting

The following are some ideas to help you fix problems and better understand functions related to remote system print.

2.10.1 General Troubleshooting Hints

When you have problems with the remote system print function, you should generally follow these steps until you find enough information to solve the problem:

1. Look in the message queue specified for the writer. By default this is QSYSOPR.
2. Look in the message queue QNETSPLF.
3. Look in the job log of the writer job. When a remote writer is active, a job is present in subsystem QSPL with the same name as the output queue (or with a number from 0 to 9 if you have multiple writers started to the queue).

   Note: An easy way to find all the jobs for a given remote writer is to issue the following command:

   `WRKJOB JOB(outq-name)`

   You may also try the following:

   `WRKSPLF SELECT(QSPLJOB)`
4. If using SNA, use the command `DSPDSTLOG` to view the distribution logs. It may also be helpful to view the distribution queues with `WRKDSTQ`.
5. For TCP/IP queues you need to look at the LPD job.
   - For jobs which have ended abnormally use the following command:

     `WRKSPLF SELECT(QTCP)`

     Look for spooled files which start with QTLPD in the User Data field.
   - For active LPD jobs look for jobs in the QSYSWRK subsystem that start with QTLPD.

2.10.2 CPI8078 - Distribution of Spooled File Failed

In this example we caused this problem to occur by specifying a non-existent system, DUMMY, instead of a configured system on an output queue's Remote system parameter. To figure out the problem follow these steps on the source system:

1. View the sense code issued with the CPI8078 message. It may contain enough information to solve the problem.
2. If the sense code doesn't help, follow these steps:
   a. Verify that the system name used in the Remote system field is a valid one. Misspelling here are common and disastrous.
   b. Try sending a message with `SNDNETMSG` to verify that communications and SNADS are correctly configured.

c. Verify that a user profile exists for the intended receiver on the target system. This depends on how you configured the Remote printer queue parameter:

***USER** Verify that the user who created the spooled file on the source system has a directory entry on the source system (or is covered by *ANY) and a user ID and directory entry on the target system.

***SYSTEM** This uses the QNETSPLF user ID. Ensure you have directory entries for QNETSPLF on both the source and target systems. To use *SYSTEM when going to a V2 AS/400 you must follow these steps on the target V2 system:

1) Create a QNETSPLF user ID on the target V2 system (make it *DISABLED for security purposes). Make sure that the PRTDEV parameter of the QNETSPLF user profile is set to *SYSVAL.

2) Add QNETSPLF to the system directory on the target system.

printer queue name
For AS/400s this is the name of the output queue on the target system. If the target system is a V2 AS/400 you have the following configuration in place:

1) Create the desired output queue on the target V2 system.

2) Create a user ID with the same name as the output queue on the target V2 system (make it *DISABLED for security purposes). Add it to the system directory of the target system.

3) Add a directory entry for that user ID on the source V3 system (not necessary when using *ANY).

2.10.3 CPF3395 - File Held by Writer

This message is often accompanied by `CPF3397 - Writer did not end normally`. In this example we caused the problem to occur by specifying *PASTHRU instead of the correct value *PASTHR on an output queue's Remote system parameter. To figure out the problem follow these steps:

1. Issue the command:

   ```
   WRKSPLF SELECT(QSPLJOB)
   ```

2. View the last job log in the list. Ours has the following message near the top:

   ```
   CPF9040 - Wrong characters used in User ID or address, or List
   identifier QNETSPLF *PASTHRU.
   ```

The "wrong character" is the asterisk (*), because *PASTHRU was being interpreted as the name of a system rather than as a special system value.

2.10.4 Messages not Returned for SNA

If messages are not being logged to the writer's message queue and/or the QNETSPLF message queue make sure that a directory entry for the user ID QNETSPLF is correctly configured on all systems (see 2.4.1, "Setup" on page 37).

2.10.5 *PASTHR and Double Display Station Pass-through

It can become difficult to understand where output will end up when using multiple display station pass-through sessions. Take, for example, the following example:

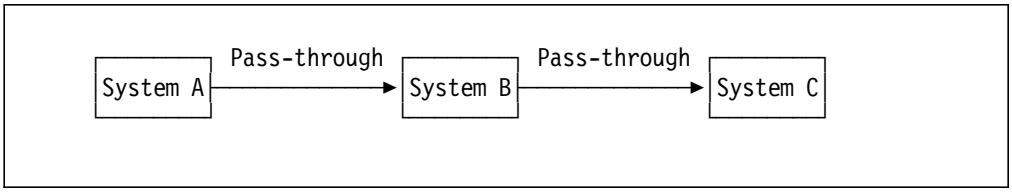

*Figure 42. *PASTHR and Double Display Station Pass-through*

In this example the user has signed on to System A, passed through to System B, and then passed through again from System B to System C. If a remote output queue was defined on System C with *PASTHR as the remote system, output placed into this queue by the user described above would end up on System B, not System A.

2.10.6 *PASTHR and System Name Resolution

When *PASTHR is used the target system name is determined dynamically. This name is resolved when the spooled file is *created*, not when the spooled file is sent. Take the following example:

1. System C has an output queue called PASSTHRU which is defined with a remote system name of *PASTHR.
2. The user passes through from System A to System C and creates a spooled file in output queue JUNK, which is not connected to any writers.
3. From another emulation session the user passes through from System B to System C. The user moves the spooled file created in step 2 from output queue JUNK to output queue PASSTHRU.
4. The spooled file is sent to System A, not System B. This is because the system name was resolved in step 2 when the spooled file was created, not in step 3 when it was placed in output queue PASSTHRU.

This is important information when creating a network of output queues in a complicated environment.

2.10.7 Failures with Heavy Use of TCP/IP

By default, two LPD servers are started when STRTCP is issued. If you are a heavy user of the LPR/LPD function you may want to start more servers. To do so issue the following command:

```
CHGLPDA AUTOSTART(*YES) NBRSVR(xx)
```

where xx is a number from 2 to 20.

To start an LPD server temporarily (until the next time TCP is ended) issue the following command:

```
STRTCPSVR SERVER(*LPD)
```

2.10.8 Remote Printing from OfficeVision/400

OfficeVision/400* forces you to specify an actual printer rather than an output queue. To “trick” OfficeVision/400 into using the remote system print function you can do the following:

1. Create a remote output queue. Make sure you specify QUSRSYS as the library to be used rather than QGPL. The following is an example:

   ```
   CRTOUTQ OUTQ(QUSRSYS/SYSTEMB)
           RMTSYS(SYSTEMB)
           TEXT('Remote output queue to SYSTEMB')
   ```

2. Create a virtual controller. This needs to be done only once. The following is an example:

   ```
   CRTCTLVWS CTLD(REMOTEPRT)
             TEXT('For remote system print virtual devices'
   ```

3. Create a virtual print device with the same name as the output queue you created in step 1. Specify the virtual controller you created in step 2.

   ```
   CRTDEVPRT DEVD(SYSTEMB)
             DEVCLS(*VRT)
             TYPE(3812)
             MODEL(1)
             CTL(REMOTEPRT)
             FONT(11)
             TEXT('Dummy virtual printer')
   ```

2.11 Additional Documentation

The following publication proved useful in testing the remote printing function.

- *AS/400 Printer Device Programming - Version 3*, SC41-3713
- *AS/400 Communications Configuration - Version 3*, SC41-3401
- *SNA Distribution Services - Version 3*, SC41-3410
- *AS/400 TCP/IP Configuration and Reference - Version 3*, SC41-3420
- *AS/400 Printing III*, GG24-4028
- *Network Job Entry Formats and Protocols*, SC23-0070
- *Communications: OS/400 Communications Configuration Reference*, SC41-0001
- *AS/400 Communications: Distribution Services Network Guide - Version 2*, SC41-9588
- *IBM TCP/IP 2.0 for OS/2: Installation and Administration*, SC31-6075
- *IBM AIX Operating System: TCP/IP User's Guide*, SC23-2309
- *IBM AIX Print Services Facility/6000 Print Submission*, S544-3878

Chapter 3. Printer Load Balancing

Two new functions of Version 3.0 Release 1.0 provide major enhancements to your ability to manage the printing load.

In this chapter we will discuss the following topics related to printer load balancing:

- Starting multiple writers to one output queue
- Restrictions when using multiple writers
- Limiting the size of print jobs based on the time of day

It is now possible to start up to ten printer writers to one output queue. This means that spooled files from a single output queue can be sent automatically to any one of up to ten printers.

It is also now possible to limit the size of spooled files that will be allowed to print, based on the time of day. The new MAXPAGES parameter of the CRTOUTQ command will let you define up to five different time periods during the day, and the maximum number of pages that can be printed during each period.

These two new functions of Version 3.0 Release 1.0 will be of particular interest to customers who need to manage their printing load. Used together, these two functions will allow customers to control the level of printing during the normal working day, and have greater confidence that overnight unattended printing will be completed successfully.

3.1 Multiple Printer Writers

The multiple writer function supports workload balancing between printers. Up to ten printer writers can be started to one output queue.

This section describes how to set up this new function, the situations where it would be useful and the restrictions in its use.

Note: You must read section 3.1.1, “Restrictions when Using Multiple Writers” on page 92 to understand the restrictions for using this function successfully or the resulting printed output may differ from that which you expected.

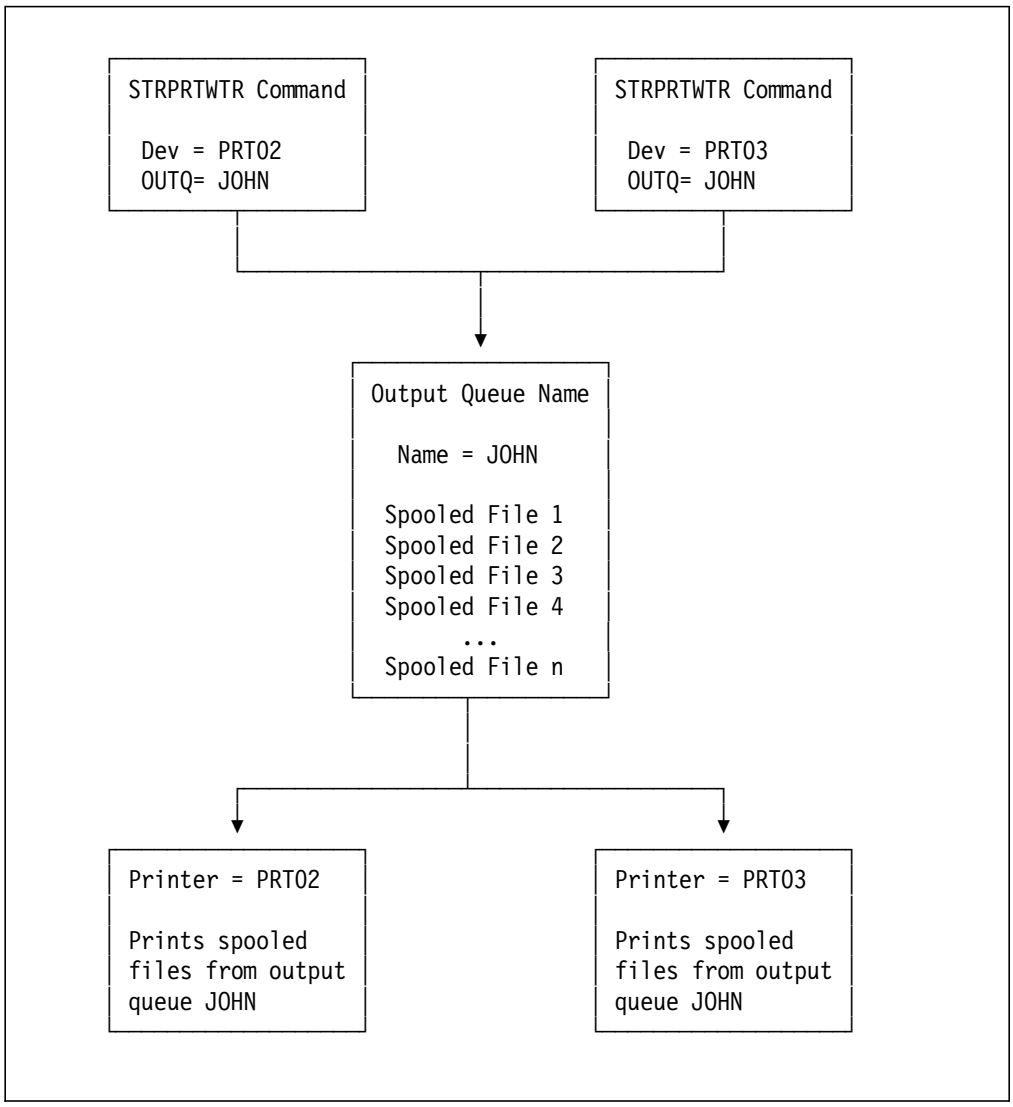

Figure 43. Two Printer Writers Started to One Output Queue

In the example shown in Figure 43 one output queue has been created, called JOHN, which we wish to use to balance the printing load across two physical printers, PRT02 and PRT03.

This function will be of particular benefit to customers who run their printers unattended for long periods of time, such as overnight.

Even if one of the printers requires intervention for some reason, the remaining spooled files on the output queue can be printed on the other printers attached to this output queue.

Printer interventions are typically caused by the following:

- The printer runs out of paper.
- The spooled file requires a change of forms on the printer.
- The printer suffers a paper jam.

The spooled file being printed on a printer at the time of the intervention will not be redirected. That spooled file must wait for the printer intervention to be

cleared before printing can be completed. However, the remainder of the spooled files on the output queue can be successfully printed to other printers attached to the same output queue.

One typical intervention on a printer is caused because the spooled output file requires different preprinted forms to be loaded on the printer.

If during a period of unattended operation you would like to be able to print a mixture of form types, this can be achieved in two ways.

The easiest way would be to exploit Advanced Function Printing (AFP) and create the different forms as overlays. This lets you load plain paper into each of the printers and any spooled file can be printed on any AFP printer, with its required resources such as overlays, fonts and page segments.

If you still need to use preprinted stationery, you can define the form type installed on each printer, using the FORMTYPE parameter of the start printer writer command (STRPRTWTR). By specifying the form type on this command, only spooled output files specifying that form type will be sent to the printer controlled by that writer. This approach, while possible, is limited, since the printer can only print spooled output files requiring that form type, but it may be adequate for the needs of many customers. Figure 44 on page 92 shows the ways to define such a set-up on the start printer writer commands, for the two printers PRT02 and PRT03, attached to output queue JOHN.

In the example PRT02 will only print invoices and PRT03 will only print statements.

```
                        Start Printer Writer (STRPRTWTR)

 Type choices, press Enter.

 Printer  . . . . . . . . . . . .   PRT02         Name, *ALL, *SYSVAL
 Output queue . . . . . . . . . .   JOHN          Name, *DEV
   Library  . . . . . . . . . . .     QGPL        Name, *LIBL, *CURLIB
 Queue for writer messages  . . .   *DEVD         Name, *DEVD, *REQUESTER
   Library  . . . . . . . . . . .                 Name, *LIBL, *CURLIB
 Form type options:
   Form type  . . . . . . . . . .   INVOICE       Form type, *ALL, *STD, *FORMS
   Message option . . . . . . . .   *INQMSG       *INQMSG, *MSG, *NOMSG...
 File separators  . . . . . . . .   *FILE         0-9, *FILE
 Drawer for separators  . . . . .   *DEVD         1-255, *DEVD, *FILE

                                                                        Bottom
 F3=Exit   F4=Prompt   F5=Refresh   F10=Additional parameters   F12=Cancel
 F13=How to use this display        F24=More keys
```

```
                        Start Printer Writer (STRPRTWTR)

 Type choices, press Enter.

 Printer  . . . . . . . . . . . .   PRT03         Name, *ALL, *SYSVAL
 Output queue . . . . . . . . . .   JOHN          Name, *DEV
   Library  . . . . . . . . . . .     QGPL        Name, *LIBL, *CURLIB
 Queue for writer messages  . . .   *DEVD         Name, *DEVD, *REQUESTER
   Library  . . . . . . . . . . .                 Name, *LIBL, *CURLIB
 Form type options:
   Form type  . . . . . . . . . .   STATEMENT     Form type, *ALL, *STD, *FORMS
   Message option . . . . . . . .   *INQMSG       *INQMSG, *MSG, *NOMSG...
 File separators  . . . . . . . .   *FILE         0-9, *FILE
 Drawer for separators  . . . . .   *DEVD         1-255, *DEVD, *FILE

                                                                        Bottom
 F3=Exit   F4=Prompt   F5=Refresh   F10=Additional parameters   F12=Cancel
 F13=How to use this display        F24=More keys
```

Figure 44. Starting Two Writers with Different Form Types

3.1.1 Restrictions when Using Multiple Writers

When starting multiple writers to a single output queue, you must ensure that the printers you are attaching are all of exactly the same type and model, with the same set of optional features.

The AS/400 will not check that the printer device descriptions are the same, so it is quite possible to start several printer writers to a single output queue where the printers are different.

If you do this, you are likely to encounter problems, some of which are outlined below:

- One or more spooled files will be held

- Information is missing from the printed pages.
- The output has been printed using the wrong font.
- The output is misaligned on the page.

These problems will occur because different printers have different characteristics. It is these differences which will cause the problems, because you do not have control of which printer will print each spooled file. A spooled file will be processed by the next available writer. If that writer cannot process the spooled file for the target device, the spooled file will be held. The spooled file cannot be rescheduled to print on a different printer without manual intervention.

Therefore we strongly recommend that to achieve the benefits that printer load balancing can provide, you ensure that all the printers started to a single output queue have the same characteristics.

Some of the different printer characteristics which you must be aware of are listed below:

- The data stream which the printer supports

  Not all the AS/400 supported data streams can be sent to every type of printer. If the data stream type for the spooled file cannot be printed on the target printer, the spooled file will be held on the output queue until manually redirected to another printer type.

- The AFPDS data and resource towers that an IPDS printer supports

  Not all IPDS printers support the full capabilities of the IPDS data stream. For example, some printers cannot be sent compressed images or bar codes because they do not support those IPDS data towers.

  Depending upon the setting of the fidelity parameter on the printer file, a spooled file requiring unsupported functions will either be held on the output queue, or printed without the unsupported elements.

- The resident fonts which the printer supports

  Some printers do have resident fonts, and some do not. In those printers that do have resident fonts, the fonts often differ between printer types. If you request the use of an unsupported font your output will either be held or print in the wrong font.

- The size of the non-printable border

  Many printers have a non-printable border around the edge of the page where you cannot print anything. The size of this border can vary between printer types. This could result in some printers not being able to fit all of the information on the page.

- The printer configuration parameters

  When installing a printer you often have to configure it for your environment. The settings for some of these configuration parameters do affect the appearance of printed output. Examples of such configuration parameters are:

  - The logical page origin

    Differences in this setting can result in output being misaligned on the page.

- The default code page and character set

  Different settings here can cause some characters to print incorrectly, such as currency symbols, special characters and accented characters.

- The default quality

  Impact printers can usually print in several qualities. Not only could the quality of the printed output vary, but different fonts are sometimes used for different qualities.

- The resolution of the printer

  Different printers have different resolutions, commonly 240 or 300 dots per inch. These differences can cause the spooled file to be held on the output queue, because the resolution of a required resource differs from the resolution of the printer.

3.2 Restricting the Size of Printed Output

A function of Version 3.0 Release 1.0 allows the customer to limit the size of spooled files that will be allowed to print during certain time periods. The function is implemented using the new MAXPAGES parameter on the CRTOUTQ command.

By making use of this new function, customers can restrict the size of printed output during the peak periods of the day. You can use this function to ensure that printers are not tied up printing very large jobs and delaying the printing of more urgent jobs. You can also restrict the impact that printing has on the processor load, so that large complex print jobs do not compete with the interactive users, for use of the processing resources, during the busy parts of the day.

Using the MAXPAGES parameter of the CRTOUTQ command, you can define up to five different time periods, and for each time period, the maximum number of pages allowed for a spooled file to print. The time periods that you define can overlap, and where this happens the lowest page number limit is the one used.

Important:

The number of pages is calculated as the number of copies multiplied by the number of pages for a single document. For example, a 17 page spooled file with the COPIES attribute set to 2 will be counted as a 34 page job.

Figure 45 on page 95 shows an example of how you might specify the MAXPAGES parameter values to restrict the size of spooled files allowed to print during the day.

For the output queue TOWNIE we will restrict the maximum number of pages which a spooled file can contain, if it is to print during the following times of day.

Time Period	Maximum Pages
00:00 to 08:00	No limit
08:00 to 09:00	50
09:00 to 15:00	30
15:00 to 16:00	20
16:00 to 17:00	30
17:00 to 18:00	50
18:00 to 24:00	No limit

You will notice that there are several ways to define these time periods, and the maximum pages for each.

We could define each of the five periods separately, but since we can define overlapping and imbedded time periods, we actually only need to make three definitions as you can see from Figure 45. When there are two limits defined for a particular time, the lower limit will be the one the system uses.

```
                         Create Output Queue (CRTOUTQ)

 Type choices, press Enter.

 Output queue . . . . . . . . . . > TOWNIE        Name
   Library  . . . . . . . . . . . >   QGPL        Name, *CURLIB
 Maximum spooled file size:
   Number of pages  . . . . . . . . > 50           Number, *NONE
   Starting time  . . . . . . . . . > 0800         Time
   Ending time  . . . . . . . . . . > 1800         Time

   Number of pages  . . . . . . . . > 30           Number
   Starting time  . . . . . . . . . > 0900         Time
   Ending time  . . . . . . . . . . > 1700         Time

   Number of pages  . . . . . . . . > 20           Number
   Starting time  . . . . . . . . . > 1500         Time
   Ending time  . . . . . . . . . . > 1600         Time
               + for more values
 Order of files on queue  . . . .   *FIFO         *FIFO, *JOBNBR
 Remote system  . . . . . . . . .   *NONE
 Text 'description' . . . . . . .   Example of the use of MAXPAGES
                                                                   More...
 F3=Exit   F4=Prompt   F5=Refresh   F12=Cancel   F13=How to use this display
 F24=More keys
```

Figure 45. Using the MAXPAGES Parameter to Control Printing

Figure 46 on page 96 shows the various possible values for the status of a spooled file on the output queue TOWNIE. We will assume that this output queue has been defined as shown in Figure 45 and that the current time of day is 15:30.

As you can see, JOB1 is printing to the attached printer, and JOB2 is waiting to print. Both of these jobs are within the maximum number of pages (20) defined for this time of day. The remaining three jobs have a status of deferred (DFR). This is because they exceed the maximum number of pages allowed for a job to print at this time of day (15:30). Based on the definitions in the CRTOUTQ parameter for this output queue, the status of JOB3 will be changed automatically to RDY at 16:00, but JOB4 will remain in deferred status until 17:00, and JOB5 until 18:00.

```
                              Work with Output Queue

Queue:   TOWNIE         Library:   QGPL           Status:   RLS/WTR

Type options, press Enter.
  1=Send   2=Change   3=Hold   4=Delete   5=Display   6=Release   7=Messages
  8=Attributes        9=Work with printing status

Opt  File        User        User Data   Sts   Pages   Copies  Form Type
     JOB1        QSYS                    WTR      20       1   *STD         5
     JOB2        QSECOFR                 RDY       3       1   *STD         5
     JOB3        ITSCID10                DFR      25       1   *STD         5
     JOB4        ITSCID11                DFR      35       1   *STD         5
     JOB5        ITSCID12                DFR      55       1   *STD         5
                                                                        More...
Parameters for options 1, 2, 3 or command
===>
F3=Exit   F11=View 2   F12=Cancel   F20=Writers   F22=Printers
F24=More keys
```

Figure 46. Spooled File Status Values

3.2.1 Restrictions when Limiting the Size of Printed Output

This section describes some limitations you will encounter when limiting the size of spooled files.

3.2.1.1 Overriding Deferred Status

While the ability to restrict the size of spooled files for printing at certain times of the day is very useful, there will always be times when you need to print a spooled file urgently, even if it contains more than the maximum number of pages permitted.

If a spooled file is in deferred status, you cannot override the parameter settings defined for that output queue. To get such a spooled file to print, you must either redirect it to an output queue where these restriction have not been defined, or change the MAXPAGES parameter on this output queue.

If you absolutely must print a spooled file in deferred status, you should follow these steps:

1. Create a new output queue as follows:

   `CRTOUTQ QUICK`

2. Use the WRKOUTQ on the queue containing the spooled file you wish to print. Put a 2 (Change) next to the desired spooled file and press F4. Paginate to the OUTQ parameter and enter `QUICK`.
3. Stop the writer with ENDWTR OPTION(*IMMED) and restart it to output queue **QUICK**.
4. When the file has printed, end the writer and restart to the original output queue.

To change the MAXPAGES parameter, end the active writers and then use the CHGOUTQ command to make the necessary changes to the MAXPAGES parameter. It would be a good idea to ensure all the jobs on the output queue

are held, except the one you wish to print, before restarting the writers. This is less convenient, as you will then likely have to stop the writer again to change the output queue definition back to its original state.

3.2.1.2 USERASCII Files

If a spooled file is of type *USERASCII, the AS/400 is unable to determine the number of pages in the file. This means that you cannot configure an output queue to limit the page size of *USERASCII spooled files allowed to print during a given time period. This function is valid only for *SCS, *IPDS and *AFPDS spooled files.

Chapter 4. Version 3.0 Release 1.0 Printer File and DDS Enhancements

This chapter contains an overview of the changes that have been made in Version 3.0 Release 1.0 to the printer file and Data Description Specifications (DDS). Printer files describe how the system is to operate on data as it passes between your application program and a printer. DDS is a powerful tool on the AS/400 which can be used to describe data attributes (such as the names and lengths of records and fields) in file descriptions external to the application program that processes the data. For more information about DDS see *AS/400 DDS Reference - Version 3*, SC41-3712.

4.1 Printer File Changes in V3R1

The changes to the printer file for Version 3.0 Release 1.0 were made to support functions provided on new printers such as the IBM 3935 printer. Two new parameters (OUTBIN and REDUCE) were added to the printer file commands CRTPRTF, CHGPRTF, and OVRPRTF. In addition, changes were made to the DRAWER and MULTIUP parameters.

4.1.1 OUTBIN

The keyword OUTBIN has been added to the printer file commands in order to make use of multiple output bins on new printers. For example, the IBM 3935 printer has two output bins. One is considered the main output bin and the other is considered a sample output bin. The main output bin would be used when the OUTBIN parameter of the printer file was set to *DEVD or 1. The sample output bin would be used when the OUTBIN parameter of the printer file was set to 2. The following values are valid for the OUTBIN parameter of the CRTPRTF, CHGPRTF, and OVRPRTF commands. Of course, the value *SAME is also valid for CHGPRTF.

***DEVD** The output bin to be used is the device default output bin.

1-65535 Specifies the output bin to be used. The printer hardware determines which output bin corresponds to the number specified. The large range (1-65535) was added in order to handle future support requirements such as post processing equipment.

4.1.2 REDUCE

The keyword REDUCE has been added to the printer file commands in order to allow you to specify whether you want the software multiple up (multiup) function, which has been available since Version 2.0 Release 1.0 on the AS/400, or the hardware **n-up** function now available on some printers. For example, the IBM 3835, 3900, and 3935 printers support the n-up function which allows two, three, or four pages of output to be placed on one side of a sheet of paper.

There are several differences which you should consider before deciding whether to utilize the software multiup function or the hardware n-up function.

- Software multiup supports only two and four pages of output per side of a sheet of paper.

  Hardware n-up supports two, three, and four pages of output per side.

- Software multiup is not supported when advanced functions such as host resident (downloaded) fonts are used. It is also not supported for some data streams such as when the device type is *LINE or *AFPDSLINE.

  Hardware n-up supports advanced functions and all data streams which can be printed on those devices which support n-up.

- Software multiup reduces the page size by reducing the size of the fonts and increasing the lines per inch.

  Hardware n-up does not reduce the page size. It is up to the application to generate the page with the correct size in order to fit into the partition of the sheet which the printer will use.

- Software multiup is designed to fit all the data on an 8 1/2″ x 11″ sheet of paper and uses set margins depending on the rotation and number of pages per side of a sheet.

  Hardware n-up utilizes whatever paper is loaded and does not use any margins. This allows you to put two 8 1/2″ x 11″ pages on one 11″ x 17″ piece of paper or two A4 pages on one A3 sheet of paper.

- Software multiup uses the values for FRONTOVL and BACKOVL to put one overlay on the front of the sheet and one overlay on the back of the sheet.

  Hardware n-up puts each page including the overlays individually into the partitions of the sheet. Thus, the front overlay would appear in the first partition and the back overlay would appear in the second.

- Software multiup works with data that has been rotated using the PAGRTT parameter of the printer file.

  Hardware n-up does not work correctly with rotated pages. This is because the pages are automatically rotated in order to fit the pages correctly into the partitions of the sheet. When the text is rotated also, it produces undesirable results. See *AS/400 Printer Device Programming - Version 3*, SC41-3713 for more information.

The following values are valid for the REDUCE parameter of the CRTPRTF, CHGPRTF, and OVRPRTF commands. Of course, the value *SAME is also valid for CHGPRTF.

***TEXT** The text output is reduced when doing multiup. This value specifies that software multiup is to be done.

***NONE** The text output is not reduced when doing multiup. This value specifies that hardware n-up is to be done.

4.1.3 DRAWER

The keyword DRAWER has been expanded to allow more drawer values. New printers now support more than three source drawers. For example, the IBM 3935 printer has four source drawers. To allow for future printers, the range for DRAWER has been expanded to support up to 255 source drawers. The following values are valid for the DRAWER parameter of the CRTPRTF, CHGPRTF, and OVRPRTF commands. Of course, the value *SAME is also valid for CHGPRTF.

1-255 The paper is fed from the source drawer indicated. The printer hardware determines which source drawer corresponds to the number specified.

***E1** The envelopes are fed from the envelope drawer.

4.1.4 MULTIUP

The keyword MULTIUP has been enhanced to allow the value of 3 in order to support the hardware n-up feature. The value 3 is only supported when the REDUCE parameter value is *NONE. The following values are valid for the MULTIUP parameter of the CRTPRTF, CHGPRTF, and OVRPRTF commands. Of course, the value *SAME is also valid for CHGPRTF.

1-4 Indicates the number of pages printed on one side of a sheet of paper.

4.2 DDS Changes in V3R1

Most of the DDS changes for printer files in Version 3.0 Release 1.0 were made to allow more flexibility in the positioning of AFP objects. You can now specify the position for your overlays, page segments, and graphics data files (GDF) from your application program. This can be very useful when you would like to vary the position of one of these objects depending on the amount of data that your application is producing. This can be thought of as “floating” page segment, overlay and GDF support.

For instance, you might want to position an overlay which contains a shaded box so that it just surrounds the totals field on your report. However, you don’t know until the program runs how many individual detail records you will have which contribute to that total. It is now possible to pass the position of the overlay from your application to the system in order to correctly position the overlay so that the box surrounds your totals field.

The other change to DDS involves the DRAWER keyword. Here again, the change involves additional values which are allowed in order to support new printers with additional source drawers.

4.2.1 OVERLAY DDS Keyword

The OVERLAY keyword which is used to include overlays in your output now allows the position-down and position-across fields to be program-to-system fields. Prior to V3R1, only the overlay and library name parameters could be program-to-system fields. In order to use these new program-to-system fields, the fields must be defined as length 5 with 3 decimal positions, data type S, and usage P in your DDS. The following example shows the DDS for a record format which uses program-to-system fields for all parameters of the OVERLAY keyword.

```
|...+....1....+....2....+....3....+....4....+....5....+....6....+....7....+....8
     A*
     A          R REC1                      OVERLAY(&LIB/&OVLS &POSD &POSA)
     A            LIB           10A  P
     A            OVLS           8A  P
     A            POSD           5S 3P
     A            POSA           5S 3P
```

Figure 47. OVERLAY Keyword with Program-to-System Fields

4.2.2 PAGSEG DDS Keyword

The PAGSEG keyword which is used to include page segments in your printed output now allows the position-down and position-across fields to be program-to-system fields. Prior to V3R1, only the page segment and library name parameters could be program-to-system fields. In order to use these new program-to-system fields, the fields must be defined as length 5 with 3 decimal positions, data type S, and usage P in your DDS. The following example shows the DDS for a record format which uses program-to-system fields for all parameters of the PAGSEG keyword.

```
|...+....1....+....2....+....3....+....4....+....5....+....6....+....7....+....8
     A*
     A          R REC1                      PAGSEG(&LIB/&PSEG &POSD &POSA)
     A            LIB           10A  P
     A            PSEG           8A  P
     A            POSD           5S 3P
     A            POSA           5S 3P
```

Figure 48. PAGSEG Keyword with Program-to-System Fields

4.2.3 GDF DDS Keyword

The GDF keyword which allows you to include graphics data files in your printed output now allows the position-down, position-across, graph-depth, graph-width, and graph-rotation fields to be program-to-system fields. Prior to V3R1, only the graph-file, graph-library, and graph-member parameters could be program-to-system fields. In order to use these new program-to-system fields, the position-down, position-across, graph-depth, and graph-width fields must be defined as length 5 with 3 decimal positions, data type S, and usage P in your DDS. The graph-rotation field must be defined as length 3 with 0 decimal positions, data type S, and usage P. The following example shows the DDS for a record format which uses program-to-system fields for all parameters of the GDF keyword.

```
|...+....1....+....2....+....3....+....4....+....5....+....6....+....7....+....8
     A*
     A          R REC1                      GDF(&GLIB/&GFILE &GRAF &POSD +
     A                                      &POSA &GDEP &GWID &GROT)
     A            GLIB          10A  P
     A            GFILE         10A  P
     A            GRAF          10A  P
     A            POSD           5S 3P
     A            POSA           5S 3P
     A            GDEP           5S 3P
     A            GWID           5S 3P
     A            GROT           3S 0P
```

Figure 49. GDF Keyword with Program-to-System Fields

4.2.4 DRAWER DDS Keyword

The DRAWER keyword now supports source drawer values ranging from 1-255 in addition to *E1 (envelopes). Previously, only drawers 1-3 and *E1 were supported.

Chapter 5. AS/400 Printing Enhancements

This chapter covers printing enhancements provided by PTFs, and functions that can be enabled by data areas. Some of the PTFs are already part of the base code for V2R3, V3R0.5, and V3R1. Additional information on this topic can be found in chapter 9 of the *AS/400 Printing III*, GG24-4028. The following printing enhancements are discussed in this chapter:

- First/following pages overlay enhancement
- Displaying AFPDS spooled files
- Disabling resident fonts support
- 270 degree rotation with *AUTO or *COR
- QPRTVALS data area
  - IBM 4028 and its logical origin position
  - IBM 4028, 3835, and 3831 with 90 degree rotation
  - IBM 3835-002 and its logical origin position
  - Front/Back margins and the positioning of overlays and page segments
  - 3/4 inch top margin for *COR
- IBM 3912 and 3916 print output presentation
- IBM 3912/3916/4028 font enhancements
- WRKAFP command

5.1 First/Following Pages Overlay Enhancement

Assuming you have the necessary printer and it is configured as AFP(*YES), the AS/400 allows you to print overlays on the front and back sides of your output. The parameters in the printer file which allow you to perform this function are FRONTOVL and BACKOVL.

An enhancement has been added with PTFs SF13645 and SF13647 in V2R2, and is included in V2R3, V3R0.5 and V3R1. By specifying a form type (FORMTYPE) that starts with the characters $OVL, the meaning of the front and back overlay (FRONTOVL/BACKOVL) parameters will be interpreted by the operating system to mean first page overlay and following pages overlay. For example, the FORMTYPE parameter can be specified as:

- $OVL
- $OVLBILL
- $OVL*STD

If the form type starts with the characters $OVL, OS/400 will print the overlay specified in the FRONTOVL parameter on the first page of the spooled file. The overlay specified in the BACKOVL parameter will be printed on all other pages. If you are printing on both sides of the sheet of paper (duplex), page 2 will be on the back side of the first sheet of paper, and the overlay specified in the BACKOVL parameter will be used.

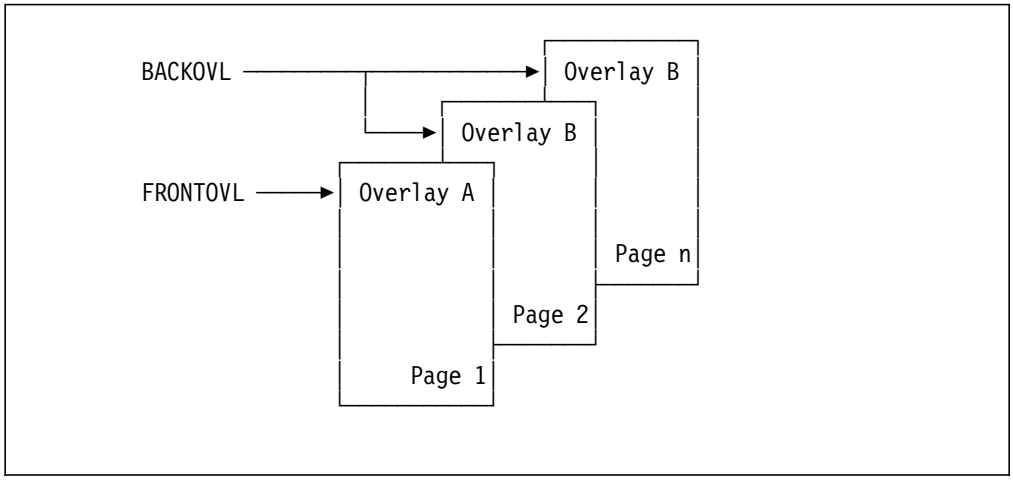

Figure 50. First and Following Pages Overlay Example

With spooled files that specify a printer device type of *AFPDS, references to the front and back side overlays are inserted into the spooled file when the file is created. Therefore, for applications that specify a printer file with a device type of *AFPDS, the form type must start with $OVL when the spooled file is being created. You cannot change the form type in the spooled file attributes after the file has been created and get this new function.

Spooled files that specify a printer file device type of *SCS or *IPDS do not have this restriction. You can change the form type to start with $OVL after the file has been created and activate this new function.

5.2 Displaying AFPDS Spooled Files

Prior to this enhancement, when you attempted to display a spooled file with device type *AFPDS using the Display Spooled File (DSPSPLF) command or the option 5 (Display) from the Work Spooled Files (WRKSPLF) screen, the file was not displayed and the following message was sent to the user:

```
CPF3429 - File cannot be displayed, copied, or sent
```

An enhancement to display the text portion of an AFPDS spooled file is provided with PTF SF14162 for V2R2, PTF SF16148 for V2R3, and is included in V3R0.5 and V3R1. Up to 378 columns of text can be displayed.

```
                              Display Spooled File
File  . . . . . :   QSYSPRT                          Page/Line   1/6
Control . . . . .                                    Columns     1 - 78
Find  . . . . . .
*...+....1....+....2....+....3....+....4....+....5....+....6....+....7....+...

         Title                                       Order Number

         IPDS Reference manual                         S544-3417
         MODCA Reference manual                        SC31-6802
         BCOCA Reference manual                        S544-3766
         FOCA Reference manual                         S544-3285
         GOCA Reference manual                         SC31-6804
         IOCA Reference manual                         SC31-6805
         PTOCA Reference manual                        SC31-6803
                                                                        More...
F3=Exit   F12=Cancel   F19=Left   F20=Right   F24=More keys
```

Figure 51. Display Spooled File Screen

With the PTFs, the contents of an AFPDS spooled file will not be displayed if the user does not have *ALLOBJ authority.

To fix this problem, do the following after the PTF has been applied to the system and the system is IPLed.

1. Sign on with QSECOFR user profile.
2. Enter the following command and press **Enter**:

   `EDTOBJAUT OBJ(QSYS/QSPCADSP) OBJTYPE(*PGM)`
3. Press **F6=Add new users**.
4. Under the column "User", add the word QSPL and under the column "Object authority", add the word *ALL.
5. Press **Enter** twice.

5.3 Disabling Printer Resident Fonts Support

This enhancement allows you to disable the printer resident font support for IPDS printers configured with the parameter AFP set to *YES. The following PTFs are needed to implement the entire function:

- V2R2: SF16030, SF17303, SF17304, SF17305, and SF17306.
- V2R3: SF16398, SF19118, SF19119, SF19120, SF19121, and SF19168.
- V3R0.5: SF16908, SF16902, SF16903, SF16904, SF16582, SF16583, SF16584, SF16585, and SF16586 (these can all be obtained by applying cumulative PTF tape C4263305).
- V3R1: Included in the base code.

This support permits you to force the printer writer to substitute fonts stored in AS/400 libraries for printer resident fonts referenced in a spooled file. This enhancement is valid for all spooled files (from customer applications, OfficeVision/400, ...etc).

Consider using this support if you have a printer device description which is configured with AFP(*YES) and that printer has resident fonts (such as 3816, 3912, 3916, 3935, 4028).

Note: Do not use the function in this PTF to disable use of resident fonts when printing to an impact printer (such as a 4224, 4230, or 4234). Results will be unpredictable because these printers do not support the downloading of host resident fonts.

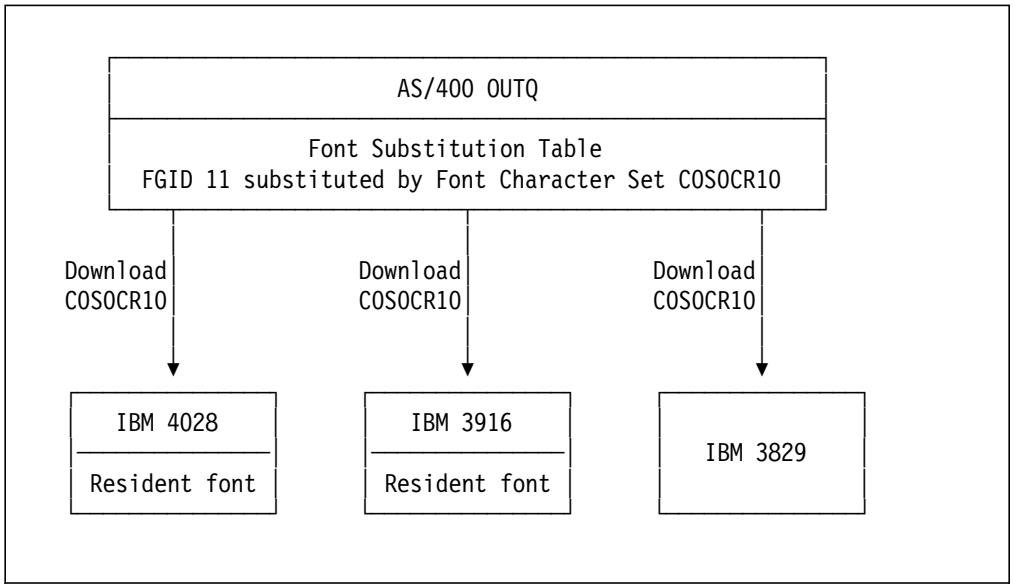

Figure 52. Disabling Resident Printer Fonts Example

To disable the resident fonts support you must create a data area as shown in 5.3.4, “Disabling Resident Fonts Support Implementation” on page 109, or you can use the command WRKAFP described in 5.8, “Work with AFP (WRKAFP) Command” on page 131. The PTF cover letter also contains this information.

Font character sets must be available on your system. You must also have the character set in the density needed by your printers (240 or 300 pels). These fonts are normally stored in libraries such as QFNTCPL, QFNT00-15, QFNT300CPL, QFNT300LA1 and QFNT240LA1 on your system.

5.3.1 Code Page Considerations

When the resident font support is disabled, a host resident font character set is substituted for each FGID used in the spooled file and this font character set is downloaded to the printer. In addition, a host resident code page is substituted based on the font and the CHRID spooled file attribute, and this code page is also downloaded to the printer. You can determine what substitution took place by displaying the message queue for the spool writer and searching for the message PQT2066. This message contains the substitution information including the FGID and code page being substituted for and the font character set and code page substituted.

The default CHRID value on the printer file is *DEVD (which in this case means “Device Default,” not “Device Description”). In addition, all externally described printer files use *DEVD for the CHRID for all fields which do not have the DDS CHRID keyword specified. When you create a device description for a printer with AFPATTACH(*WSC), you are not allowed to specify a default CHRID for the

printer. This is because *DEVD for these printers means that the system should tell the printer to use its default code page without really knowing what it is. If the disable resident font support is implemented for an IPDS printer attached to a workstation controller (AFPATTACH(*WSC)), the system must know what CHRID to use when doing the substitution to a host resident resource.

The PTFs for the disable resident font support handle this situation. When CHRID(*DEVD) is used in your printer file (or the printer file is externally described), the writer will use the code page ID specified in the AS/400 system value QCHRID. If you want to display the system value for the code page type the following:

```
DSPSYSVAL QCHRID
```

If you do use a program described printer file or an externally described printer file making use of the CHRID DDS keyword and specify a specific CHRID value in your printer file, the code page substitution is based on the value specified in the printer file CHRID parameter. For example, if your printer file had a CHRID(697 500), the code page substituted for would be 500 and the substitute host resident code page would be T1V10500.

5.3.2 How Font Substitution Works

With the disable resident fonts support, the font substitution will occur as if the specified printer does not support resident fonts. If an FGID is specified, then the AS/400 will substitute a character set, according to table D-5 in *AS/400 Printer Device Programming - Version 3*, SC41-3713. The following table, Table 7, is an extract from that table:

Table 7. Extract from Table D-5 of the Printer Device Programming

Registered Font ID	Font Width	Font Attributes	Map Fidelity	Font Character Set Name (first choice)	Font Character Set Name (second choice)
11	144	Normal	Exact	C0S0CR10	
86	120	Normal	Exact	C0S0PR12	
428		Bold italic	Exact	C04500XX	C0S0CIXX
4919	40	Normal	Exact	C0E20G60	C0D0GT18

The **Map Fidelity** column indicates whether or not the first choice is considered to be an exact match of the printer resident font requested in your spooled file.

The first choice is used if present on your AS/400 system. The second choice is used if the first choice cannot be found. If the first choice is a metric-only font character set (name begins with the characters C0E), the AS/400 system uses the second choice regardless of the fidelity setting. For fonts with multiple widths (such as font 428), no font width is given in the table and the character set names end in XX. For these fonts, multiple substitutions are possible depending on the font width (as indicated by the point size when specifying the font).

Note: If the FGID is not listed in the table D-5, the substitution defaults to font character set C0S0CR10 and code page T1V10037.

The following are some examples of substitutions which might take place using CHRID(697 500) with different FGIDs in the printer file.

- FGID 11 is replaced by font character set C0S0CR10 and code page T1V10500.

  FGID 11 is in the table and the first choice is selected.

- FGID 86 is replaced by font character set C0S0PR12 and code page T1V10500.

  FGID 86 is in the table and the first choice is selected.

- FGID 428 with point size of 10.0 (font width 120) is replaced by font character set C0S0CI12 and code page T1V10500.

  FGID 428 is in the table and as the first choice is not available in the system, the second choice is selected.

- FGID 761 is replaced by font character set C0S0CR10 and code page T1V10037.

  FGID 761 is not in the table and, in this case, the default character set C0S0CR10 and the default code page T1V10037 are selected.

- FGID 4919 with a point size of 6.0 (font width 40) is replaced by font character set C0D0GT18 and code page T1V10500.

  FGID 4919 is in the table and as the first choice is a metric-only font (name begins with C0E), the second choice is selected.

Whenever possible, if the printer you are using does not support resident fonts or if you disable the resident fonts support for your printer, specify the font in terms of a character set and code page, or a coded font. As long as the font exists on the system at the correct resolution and rotation, and the library containing it is in your library list, that font will be downloaded to the printer.

5.3.3 OfficeVision/400 and Font Substitution

OfficeVision/400 (OV/400) only allows the user to specify a font using an FGID and a point size. If the target printer supports resident fonts, and the requested font is not resident, a different printer resident font will be substituted. Host resident fonts will not be downloaded to a printer which has resident fonts.

A copy of the OV/400 table of supported fonts can be found in the publication *AS/400 SAA OfficeVision/400: Using OfficeVision/400 Word Processing*, SH21-0701. An extract from this table is shown in Table 8. This table is similar to table D-2 in the publication *AS/400 Printer Device Programming - Version 3*, SC41-3713, and also shows the font substitution that will take place for the various IBM printers supporting resident fonts.

Table 8. OV/400 Supported Fonts and Font Substitution

Type Style	Attri-butes	Point Size	Font Width	Font Name	Printers						
					4224	4234	3812 SCS	3812 IPDS	5219	4028	4019
11	M		144	Courier							
86	M		120	Prestige	87	87					
87	M		120	Letter Gothic						85	

Where the entry for a particular printer is empty, the table implies that the specified font is resident on the printer, and therefore no font substitution will take place. For the 3912/3916 printers, refer to the 4028 column.

If you are printing to a printer which does not support resident fonts, such as the 3825, a font substitution will take place from the FGID and point size to an AS/400 resident font, and the font will be downloaded to the printer.

If you are printing to a printer with the resident fonts support disabled, a direct font substitution will not be done. Instead, the AS/400 will first check if the FGID is a supported resident font for the specified printer. If the FGID is supported, the host resident font will be substituted based on table D-5. If the font is not supported, first a substitution to a supported resident FGID will take place, and then, this FGID will be used when doing the substitution to a host resident font according to table D-5.

Refer to 5.3.2, “How Font Substitution Works” on page 107 for more detailed information on font substitution.

The following are some examples of substitutions which might take place using the OV/400 supported fonts and font substitution table, and table D-5:

Note: The FGID was specified in the document with a Format Change (F20) at the beginning of the document and FGID 11 (Default FGID) was specified in the document text profile. The document was created with a CHRID(697 500) and was printed on an IBM 4028.

- FGID 11 specified in the format change. FGID 11 is replaced by character set C0S0CR10 and code page T1V10500.

  FGID 11 is a supported resident font for an IBM 4028 and FGID 11 is substituted for using table D-5.

- FGID 86 specified in the format change. FGID 86 is replaced by character set C0S0PR12 and code page T1V10500.

  FGID 86 is a supported resident font for an IBM 4028 and FGID 86 is substituted for using table D-5.

- FGID 87 specified in the format change. FGID 85 is replaced by character set C0S0CR12 and code page T1V10500.

  FGID 87 is not a resident supported font for an IBM 4028. First FGID 87 is replaced by a supported resident font (FGID 85), and then FGID 85 is substituted for using table D-5. Thus, instead of a Letter Gothic font, you end up with a Courier font.

5.3.4 Disabling Resident Fonts Support Implementation

To disable the resident fonts support, you must create a data area object on your system or you can implement the WRKAFP command. For detailed information on the WRKAFP command see 5.8, “Work with AFP (WRKAFP) Command” on page 131.

Note: As the same position in the data area is used for different functions, we recommend you use the WRKAFP command.

To create the data area issue the following command:

```
CRTDTAARA DTAARA(QGPL/printer_device_name)
          TYPE(*CHAR)
          LEN(40)
          VALUE(X'E6E6D7C4E3D9C8D9000000000000000000000000000002000
                                  00000000000000000000000000000000')
```

For V2R2, the data area length should be 24 and the last 16 zeros should not be used. To verify that you have created and set the data area correctly, please check the following after executing CRTDTAARA:

1. The data area is located in QGPL.
2. The data area has the same name as the printer device description you wish to use.
3. The first 8 characters of the data area are: WWPDTRHR
4. The next 32-bytes contain zeroes, except for the 23rd byte. The 23rd byte should have a value of X'20'.

If you want to modify this data area, you may do so by using the CHGDTAARA command:

```
CHGDTAARA DTAARA(QGPL/printer_device_name (23 1))
               VALUE(X'20')
```

To verify that you have changed the data area correctly, please verify that only the 23rd byte has been modified.

Note: This function is intended for use with any printer that supports resident fonts. The exceptions are the impact printers (such as the the 4224, 4230, and 4234). If you are using the Distributed Print Function (DPF) contained with PSF/2, use of this function is not necessary.

In order for an AFP printer writer to detect that its data area has been created or changed, you must either:

1. End (ENDWTR) and then start (STRPRTWTR) the printer writer.
2. Hold (HLDWTR) and then release (RLSWTR) the printer writer.

5.4 270 Degree Rotation with *AUTO or *COR

Output that is rotated via the *AUTO or *COR rotation value in the spooled file attributes is normally rotated 90 degrees. Some customers want the system to rotate the output 270 degrees instead.

If you want the system to rotate the output 270 degrees, you must create a data area object on your system. If the data area is created correctly, has the correct owner, and contains the correct data, all output which is rotated via the *AUTO and *COR rotation values will rotate 270 degrees. In a sense, you can think of the data area as a system value which tells the system whether to rotate 90 or 270 degrees when processing *AUTO and *COR rotation values.

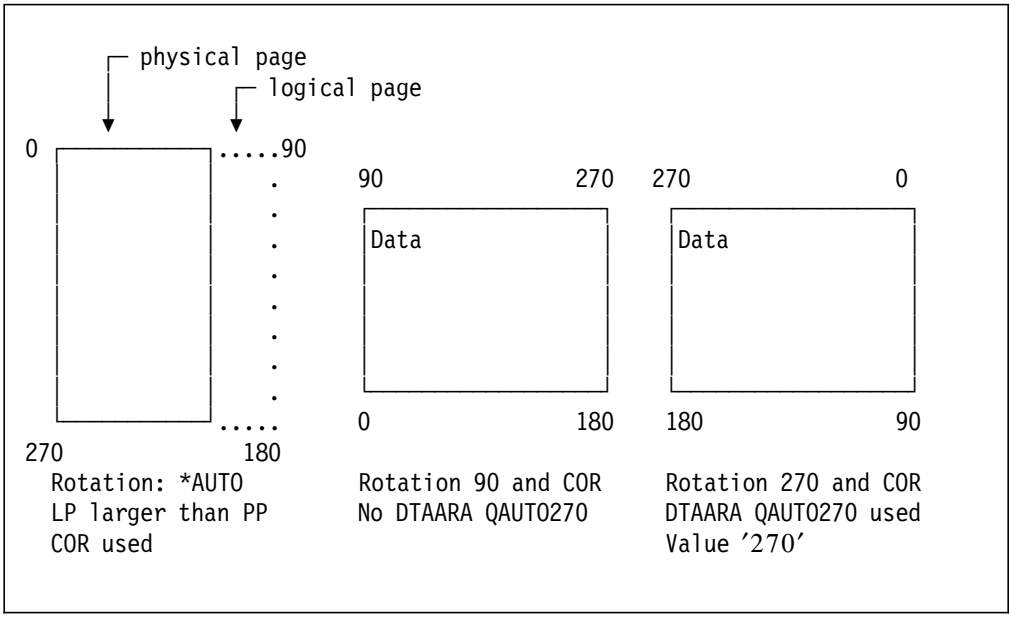

*Figure 53. Rotation 270 Degrees with *AUTO or *COR Example*

To create the data area issue the following commands:

```
1. CRTDTAARA DTAARA(QUSRSYS/QAUTO270) TYPE(*CHAR) LEN(3)
VALUE('270') AUT(*ALL)

2. CHGOBJOWN OBJ(QUSRSYS/QAUTO270) OBJTYPE(*DTAARA)
NEWOWN(QSYS) CUROWNAUT(*SAME)

3. GRTOBJAUT OBJ(QUSRSYS/QAUTO270) OBJTYPE(*DTAARA)
USER(*PUBLIC) AUT(*ALL)
```

To deactivate this special function, you can either change the data area value to something other than '270', you can change the owner of the data area, or you can delete the data area.

Note: This fix is included in OS/400 V2R2 and subsequent releases. However, it is still necessary to create the data area to activate the function contained in the fix.

5.5 QPRTVALS Data Area

Some special print functions are enabled using the data area QPRTVALS. You can choose to take advantage of these functions or not by modifying the data area QPRTVALS position 1, 2, 3, 4, or 5. These functions are:

- IBM 4028 (also 3912/3916) and its logical origin position
- IBM 4028 (also 3912/3916), 3835, and 3831 with 90 degree rotation
- IBM 3835-002 and its logical origin position
- Front/Back margins and the positioning of overlays and page segments
- 3/4 inch top margin for *COR

You can check if the data area called QUSRSYS/QPRTVALS exists on your system by issuing the following command:

```
DSPDTAARA DTAARA(QUSRSYS/QPRTVALS)
```

If the data area exists on your system, you will receive the following display:

```
                                Display Data Area
                                                                System: RCHASM02
 Data area . . . . . . . :   QPRTVALS
   Library . . . . . . . :     QUSRSYS
 Type  . . . . . . . . . :   *CHAR
 Length  . . . . . . . . :   256
 Text  . . . . . . . . . :   Data area QPRTVALS

            Value
 Offset     *...+....1....+....2....+....3....+....4....+....5
     0     ´YYYYY
    50     ´
   100     ´
   150     ´
   200     ´
   250     ´      ´

                                                                     Bottom
 Press Enter to continue
 F3=Exit   F12=Cancel
```

Figure 54. Display Data Area QPRTVALS Screen

A ´Y´ in the position 1, 2, 3, 4, or 5 indicates:

- A ´Y´ in position 1 indicates you want to change the logical page origin for the IBM 4028 (also 3912/3916).
- A ´Y´ in position 2 indicates you want to change the logical page size when using an IBM 4028 (also 3912/3916), 3835, or 3831 printer when you are rotating the text 90 degrees.
- A ´Y´ in position 3 indicates you want to change the logical page origin for an IBM 3835-2.
- A ´Y´ in position 4 indicates you want the system to not use Front/Back margins when determining the position of an overlay or page segment.
- A ´Y´ in position 5 indicates you want the system to use a 3/4 inch top margin when doing *COR output.

5.5.1 IBM 4028 and its Logical Page Origin

When printing on an IBM 4028 (also 3912/3916) printer which is configured as AFP(*YES), the system normally shifts the data down and to the right in order to move the page out of the no print border of the printer. If you have the printer set up to use the whole page (switch 13 set to 00 on the IBM 4028), you might want to have the system ignore the no print border of the printer and set the logical page origin at the edge of the paper. To do this, you will have to create or change the data area QPRTVALS. The data area must contain a ´Y´ (uppercase) in position 1.

Note: See 5.6, “IBM 3912 and 3916 Print Output Presentation” on page 118 for information on settings for the IBM 3912 and 3916 printers.

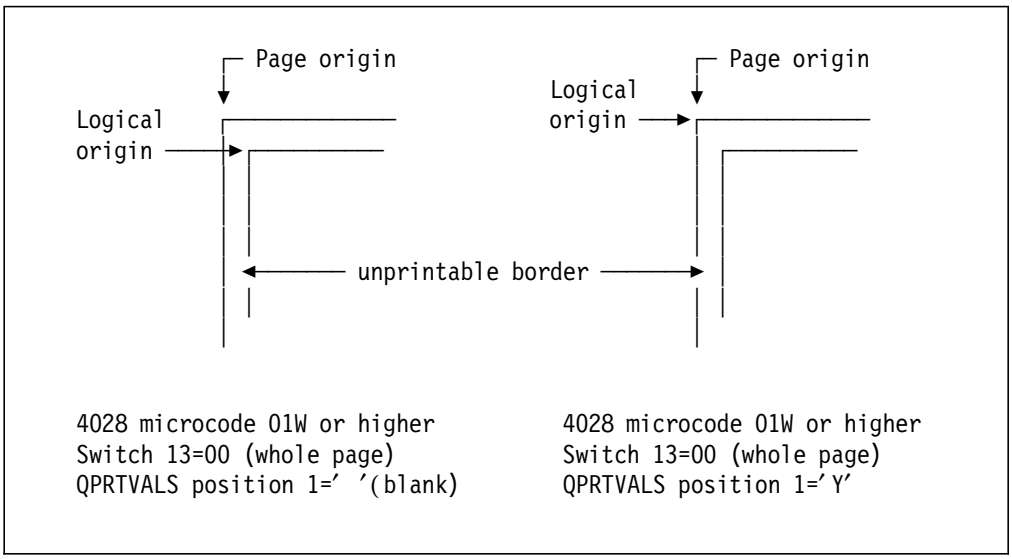

Figure 55. IBM 4028 and its Logical Page Origin

Check to see if the data area called QUSRSYS/QPRTVALS exists on your system and, if present, what the value of position 1 is.

```
DSPDTAARA DTAARA(QUSRSYS/QPRTVALS)
```

To create the data area issue the following commands:

```
1. CRTDTAARA DTAARA(QUSRSYS/QPRTVALS) TYPE(*CHAR) LEN(256)
VALUE('Y')
2. CHGOBJOWN OBJ(QUSRSYS/QPRTVALS) OBJTYPE(*DTAARA)
NEWOWN(QSYS) CUROWNAUT(*SAME)
3. GRTOBJAUT OBJ(QUSRSYS/QPRTVALS) OBJTYPE(*DTAARA)
USER(*PUBLIC) AUT(*ALL)
```

If the data area QPRTVALS exists, but position 1 is not set to 'Y' (uppercase), issue the following command:

```
CHGDTAARA DTAARA (QUSRSYS/QPRTVALS (1 1)) VALUE ('Y')
```

Note: This fix is included in OS/400 V2R2. However, it is still necessary to create the data area to activate the function contained in the fix.

5.5.2 IBM 4028, 3835, and 3831 with 90 Degree Rotation

When printing to an IBM 4028 (also 3912/3916), 3835 Model 1, or 3831 printer configured with AFP(*YES), the operating system asks the printer for the size of the printable page, and uses these values when defining the logical page size. This function was added because applications which used 90 degree rotation and printed on the first couple of lines noticed that those lines were being lost. Using the logical page size as returned by the printer solved this problem. However, many customers liked the original support. They were not concerned with losing the top two lines because they didn't print on these lines anyway. Since many system-generated reports print on line 1, the support could not be changed back so a data area fix was made.

You can access the original support with a 'Y' (uppercase) in position 2 of the data area QPRTVALS.

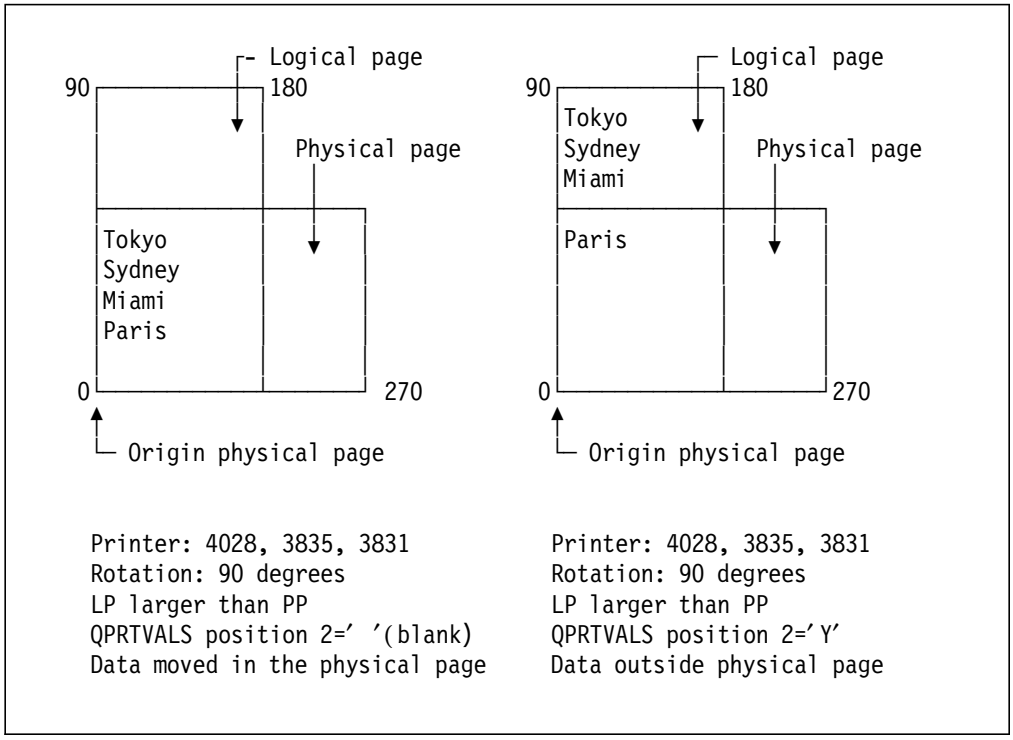

Figure 56. IBM 4028, 3835, and 3831 with 90 Degree Rotation

Check to see if the data area called QUSRSYS/QPRTVALS exists on your system and, if present, what the value of position 2 is.

```
DSPDTAARA DTAARA(QUSRSYS/QPRTVALS)
```

To create the data area issue the following commands:

```
1. CRTDTAARA DTAARA(QUSRSYS/QPRTVALS) TYPE(*CHAR) LEN(256)
VALUE(' Y')

2. CHGOBJOWN OBJ(QUSRSYS/QPRTVALS) OBJTYPE(*DTAARA)
NEWOWN(QSYS) CUROWNAUT(*SAME)

3. GRTOBJAUT OBJ(QUSRSYS/QPRTVALS) OBJTYPE(*DTAARA)
USER(*PUBLIC) AUT(*ALL)
```

If the data area QPRTVALS exists, but position 2 is not set to 'Y' (uppercase), issue the following command:

```
CHGDTAARA DTAARA (QUSRSYS/QPRTVALS (2 1)) VALUE ('Y')
```

Note: This fix is included in OS/400 V2R2. However, it is still necessary to create the data area to activate the function contained in the fix.

5.5.3 IBM 3835-002 and its Logical Page Origin

When printing to an IBM 3835 Model 1 printer, OS/400 will shift the output approximately 1/6 inch from the top and side of the page. This is because the Model 1 has an unprintable border along the perforation of the page. The IBM 3835 Model 2 printer does not have this unprintable border. Therefore, OS/400 does not shift the output on this printer.

If you have an IBM 3835-2 printer and you would like the AS/400 to shift the data like it does for the Model 1 printer, you should have a 'Y' (uppercase) in position 3 of the data area QPRTVALS.

```
                 Page origin                          Page origin
Logical
origin  ---->  ┌──────────────          Logical      ┌──────────────
               │DATA                    origin  ---->│. . . . . .
               │                                     │ .DATA
               │                                     │ .
               │                       Unprintable   │ .
               │                       border  ---->  .
               │                       (simulation)  │ .
               │                                     │

 IBM 3835 Model 2                       IBM 3835 Model 2
 No unprintable area                    Unprintable area simulated
 QPRTVALS position 3=' '(blank)         QPRTVALS position 3='Y'
 No unprintable border                  Data moved as with 3835-1
```

Figure 57. IBM 3835-002 and its Logical Page Origin

Check to see if the data area called QUSRSYS/QPRTVALS exists on your system and, if present, what the value of position 3 is.

```
DSPDTAARA DTAARA(QUSRSYS/QPRTVALS)
```

To create the data area issue the following commands:

```
1. CRTDTAARA DTAARA(QUSRSYS/QPRTVALS) TYPE(*CHAR) LEN(256)
VALUE('  Y')

2. CHGOBJOWN OBJ(QUSRSYS/QPRTVALS) OBJTYPE(*DTAARA)
NEWOWN(QSYS) CUROWNAUT(*SAME)

3. GRTOBJAUT OBJ(QUSRSYS/QPRTVALS) OBJTYPE(*DTAARA)
USER(*PUBLIC) AUT(*ALL)
```

If the data area QPRTVALS exists, but position 3 is not set to 'Y' (uppercase), issue the following command:

```
CHGDTAARA DTAARA (QUSRSYS/QPRTVALS (3 1)) VALUE ('Y')
```

Note: This fix is included in OS/400 V2R3 (for V2R2 you will have to install PTF SF12886). However, it is still necessary to create the data area to activate the function contained in the fix.

5.5.4 Front/Back Margins and Positioning of Overlays

Currently when the FRONTMGN and BACKMGN parameters are used on your printer file and overlays and page segments are also used, the overlays and page segments are moved based on these margin parameters. This includes overlays included using the FRONTOVL/BACKOVL keywords on your printer file and any overlays or page segments included using DDS. When your output produced in portrait mode, this movement due to the margins causes the normal text and the overlays and page segments to be moved across and down on the

printed page. However, if your text is rotated on the page using the PAGRTT keyword on the printer file, the results can be very undesirable since the margins cause the text to be moved one way and the overlays and page segments possibly a different way.

If you would like the operating system to not move the overlays and page segments by the values specified in the FRONTMGN and BACKMGN, you should have a 'Y' (uppercase) in position 4 of the data area QPRTVALS.

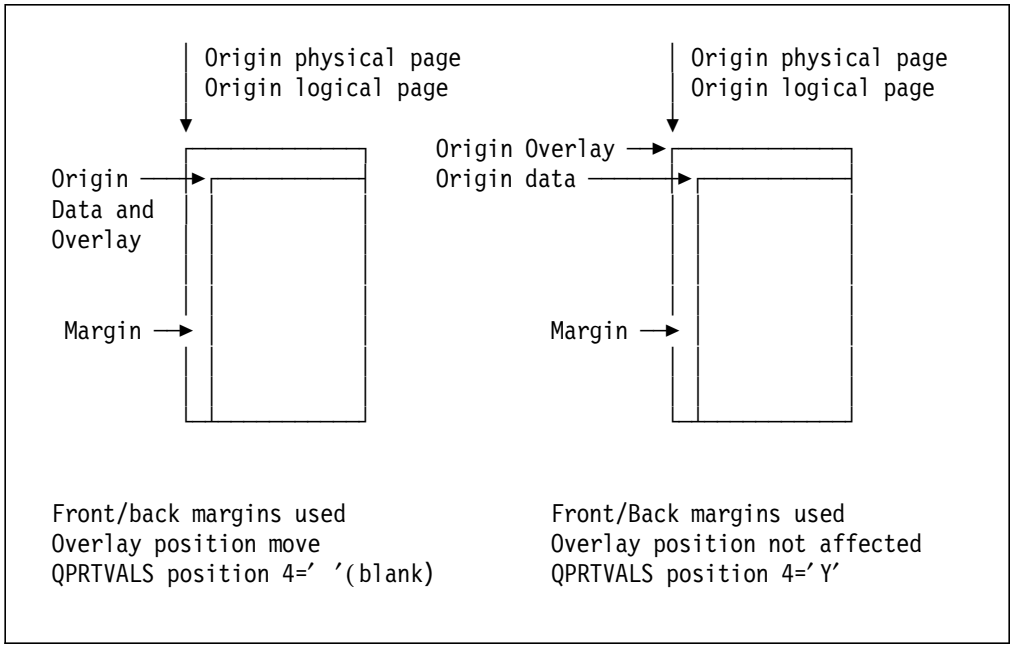

Figure 58. Front and Back Margins and Overlay Position

Check to see if the data area called QUSRSYS/QPRTVALS exists on your system and, if present, what the value of position 4 is.

```
DSPDTAARA DTAARA(QUSRSYS/QPRTVALS)
```

To create the data area issue the following commands:

```
1. CRTDTAARA DTAARA(QUSRSYS/QPRTVALS) TYPE(*CHAR) LEN(256)
VALUE('   Y')

2. CHGOBJOWN OBJ(QUSRSYS/QPRTVALS) OBJTYPE(*DTAARA)
NEWOWN(QSYS) CUROWNAUT(*SAME)

3. GRTOBJAUT OBJ(QUSRSYS/QPRTVALS) OBJTYPE(*DTAARA)
USER(*PUBLIC) AUT(*ALL)
```

If the data area QPRTVALS exists, but position 4 is not set to 'Y' (uppercase), issue the following command:

```
CHGDTAARA DTAARA (QUSRSYS/QPRTVALS (4 1)) VALUE ('Y')
```

Note: This fix is implemented in OS/400 V2R2 by PTF SF15647, in V2R3 by PTFs SF16179 and SF16208, in V3R0.5 by PTFs SF17027 and SF17048, and is included in V3R1. However, it is still necessary to create the data area to activate the function contained in the fix.

5.5.5 3/4″ Top Margin for *COR

Currently when *COR output is produced on IPDS printers, the operating system sets the page size to 11″ x 8 1/2″ and creates a 1/2″ top margin. In addition, the lines per inch value that is used is increased so that at least a 1/2″ bottom margin is left when a full 11″ (66 lines at 6 LPI) page of data was produced in the spooled file. When printing on 3 hole punched paper, this may cause some of the printed output to print in the holes of the paper.

If you would like the operating system to produce a 1/4″ larger top margin and to use a slightly higher lines per inch value in order to provide a similar bottom margin when doing *COR output on IPDS printers, you should have a ′Y′ (uppercase) in position 5 of the data area QPRTVALS.

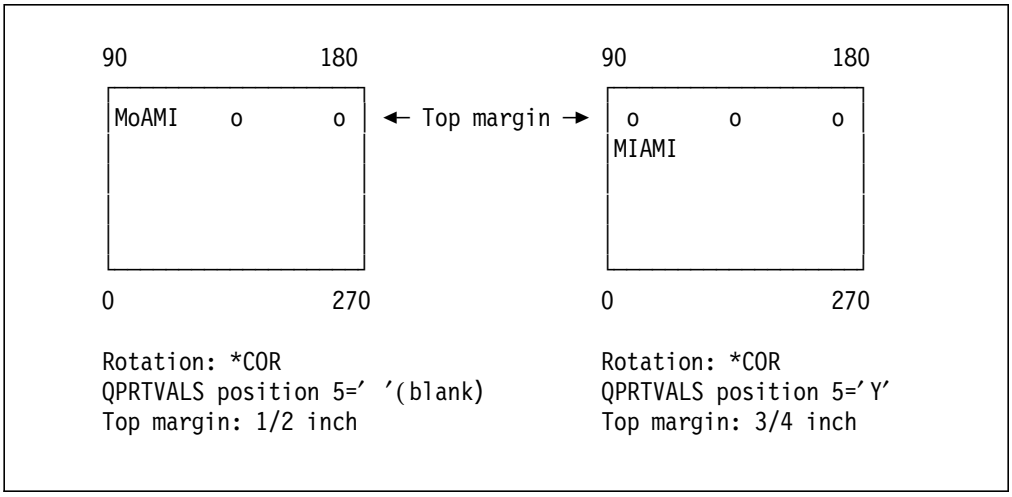

*Figure 59. 3/4 Inch Top Margin for *COR*

Check to see if the data area called QUSRSYS/QPRTVALS exists on your system and, if present, what the value of position 5 is.

```
DSPDTAARA DTAARA(QUSRSYS/QPRTVALS)
```

To create the data area issue the following commands:

```
1. CRTDTAARA DTAARA(QUSRSYS/QPRTVALS) TYPE(*CHAR) LEN(256)
VALUE(′    Y′)

2. CHGOBJOWN OBJ(QUSRSYS/QPRTVALS) OBJTYPE(*DTAARA)
NEWOWN(QSYS) CUROWNAUT(*SAME)

3. GRTOBJAUT OBJ(QUSRSYS/QPRTVALS) OBJTYPE(*DTAARA)
USER(*PUBLIC) AUT(*ALL)
```

If the data area QPRTVALS exists, but position 5 is not set to ′Y′ (uppercase), issue the following command:

```
CHGDTAARA DTAARA (QUSRSYS/QPRTVALS (5 1)) VALUE (′Y′)
```

Note: This enhancement is implemented in OS/400 V2R2 with PTF SF16176, in V2R3 with PTF SF16726, in V3R0.5 with PTF SF17181, and is included in V3R1. However, it is still necessary to create the data area to activate the function contained in the fix.

5.6 IBM 3912 and 3916 Print Output Presentation

This topic is intended to give you information on how to position your data on an IBM 3912 Model AS1 or 3916 Model AS1 (IPDS model). The position of the data depends on the printer's IPDS settings and the value of the parameter AFP (*YES or *NO) in the printer device description.

The topic 5.6.2, "Setting Examples" on page 122 contains examples of data positioning based on the IPDS settings of the printer and the value of the AFP parameter.

For detailed information on how to change the printer settings, refer to the *3912 and 3916 Page Printer User's Guide*, S544-3904.

Note: Because the 3912 and 3916 printers report back to the AS/400 that they are a 4028, the AS/400 treats these printer like a 4028 in most cases. One notable exception is that the AS/400 allows duplex printing on the 3912 and 3916 printers.

For more information on the IBM 3912 and 3916 printers see *3912 and 3916 Page Printer Models AS0 and AS1 Programming Reference for AS/400 Attachment*, S544-3902, *3912 and 3916 Page Printer User's Guide*, S544-3904, and *3912 and 3916 Page Printer Enhancements Programming Reference*, S544-5216.

5.6.1 IPDS Menu Settings (Model AS1)

The IPDS menu allows the user to control various settings when using IPDS. If you have a model AS0, the printer displays a message that this capability is not present.

To see what values are stored as settings, you can print a list of menu settings for your host environment by completing the following steps:

1. Select **MENUS.**
2. Select **SETUP MENUS.**
3. Select **MORE** until **Network Setup** appears.
4. Select **Network Setup.**
5. Select **TEST MENU.**
6. Select **Print Menus.** This prints the host and the IPDS settings.
7. Select **Ready.**

Note: The menu flow presented here assumes you have the original version of the 3912/3916 printer. If you have ordered any RPQs for these printers, this flow might be different. Look at the documentation you received with your RPQ for additional information.

The printer prints two pages containing settings as shown in the following example. This example shows the settings that were available at a specific code level identified by the firmware version number in the header. Additional settings may be available with new code levels.

```
IBM 3912 - MENU SETTINGS

Firmware Version: 119.035 / 00304049
Boot id         : 80007001
Device address  : 0

  NON IPDS MENU
    Orientation         =  COR
    LPI                 =  06
    CPI                 =  10
    Code Page           =  37
    APO                 =  Enable

  PRINTER SETUP MENU
    Job Time Out        =  90 Sec.
    Duplex Installed    =  Yes
    Installed Memory    =  4M
    Emulation           =  IPDS

  PAPER MENU
    Tray 1
      Tray Present      =  Yes
      Paper Size        =  Letter
    Tray 2
      Tray Present      =  No
      Paper Size        =  Letter
    Feeder
      Tray Present      =  No
      Paper Size        =  Letter
    Manual Feeder
      Tray Present      =  No
      Paper Size        =  Letter
```

Figure 60. Page 1 of Settings - Host Settings

```
IBM IPDS - MENU SETTINGS

Firmware Version: 106.020 / 940301 , 102.015 / 940202

  IPDS MENU

    Code Page Version        =  1
    Default Code Page        =  37
    Default Font
       Default FGID          =  11
       Default Font Width    =  144
    Margins to System        =  Off
    VPA check                =  Physical Page
    Print Offset
       Add Margins           =  off
       X Offset              =  0     pels
       Y Offset              =  0     pels
```

Figure 61. Page 2 of Settings - IPDS Settings

From the IPDS menu settings, the parameters which affect output positioning are:

Margins to System You can use the Margins to System menu item to select the size of the unprintable area that is reported to the host system. This value is used by the AS/400 when the device is configured AFP(*YES) to determine how far to move the data so that it doesn′t print in the unprintable area. The possible values are:

Off The unprintable area reported is the same as the IBM 4028 (without edge-to-edge print - switch 13=00 and switch 14=01). The printer will not print within 4.06 mm (0.16 in.) of any edge of the paper. For A4-size paper, the unprintable borders for the left and right edges in portrait orientation, or top and bottom edges in landscape orientation, are 3.38 mm (0.133 in.).

On The actual unprintable area of the IBM 3912/3916 is reported. The printer will not print within 4.24 mm (0.167 in.) of any edge of the paper. For A4-size paper, the unprintable borders for the left and right edges in portrait orientation, or top and bottom edges in landscape orientation, are 3.38 mm (0.133 in.).

The difference between these two values is very small (at most 2 pels). We recommend that when using AFP(*YES) on your printer device description that you specify Margins to System = On.

VPA check Valid Printable Area (VPA) check. The VPA check defines how the printer should check for data that falls outside the defined printable area. If the data falls outside that boundary, the printer reports an error to the host.

Note: When the 3912/3916 is attached to an AS/400, this parameter only has an effect if the printer is configured as AFP(*YES), and your spooled file attribute for FIDELITY is *ABSOLUTE. In this case, position checks are reported to the system by the printer.

If your printer is configured as AFP(*NO) or if your printer is configured AFP(*YES) and you are using the default FIDELITY value of *CONTENT, you can leave this setting at the factory default of **Physical Page**. If you are using FIDELITY(*ABSOLUTE), you might want to change this value to **MARGINS**. This will ensure that every specified pixel will be printed or an error will be reported. This setting requires that Margins to System = On.

Print Offset You can use the Print Offset menu item to select the offset of the printed output on the page.

Add Margins Your selection for the Add Margins affects how the printer positions data on the page.

On - Moves the data to the printable area. The logical page origin is set to the origin of

the printable area. This position is based on the 3912/3916 unprintable border. It is not based on the Margins to System setting.

Off - Places the data at the upper left corner of the physical page. The logical page origin is the same as the physical page origin (edge of the paper).

This option allows you to position data as if the printer didn't have an unprintable border. Data positioned in the unprintable area will not print.

Note: If the printer device description is configured with AFP(*YES), the data area QPRTVALS must contain a "Y" in position 1 in order to keep the logical origin on the edge of the physical paper.

For more information on the QPRTVALS data area, refer to 5.5, "QPRTVALS Data Area" on page 111, and 5.5.1, "IBM 4028 and its Logical Page Origin" on page 112. These sections also apply to the IBM 3912/3916 page printers.

X Offset You enter a value in the X offset in order to change the position of the logical origin in the X direction. The X offset can be used with either setting of Add Margins.

Y Offset You enter a value in the Y offset in order to change the position of the logical origin in the Y direction. The X offset can be used with either setting of Add Margins.

Note: If possible (the application printer file specifies DEVTYPE(*AFPDS) or can be changed to specify DEVTYPE(*AFPDS)), we recommend that you use the FRONTMGN and BACKMGN parameters of the printer file to move your data on the page instead of the Add Margins and X and Y Offset settings of the printer. This allows you to move only the printed output that needs to be moved. Whenever you specify values other than *DEVD, the system will use those values rather than the values returned by the printer based on the Margins to System value. For instance, if you don't want your data moved at all, you can specify FRONTMGN and BACKMGN of 0,0. When the value of FRONTMGN and BACKMGN is *DEVD, it indicates that the value returned by the printer for the unprintable border should be used to position the data unless the value of byte 1 of the QPRTVALS data area is "Y" (in which case the data will be positioned from the edge of the paper). Remember, FRONTMGN and BACKMGN values are only supported for printer files with a device type of *AFPDS.

The following examples assume that if you are using *AFPDS, the FRONTMGN and BACKMGN parameters have the default value of *DEVD.

5.6.2 Setting Examples

In order to make the examples more clear, the following figure shows the position of the printable area as reported to the host based on the *Margins to System* setting and the position of the logical origin based on the setting of the *Add Margins* parameter.

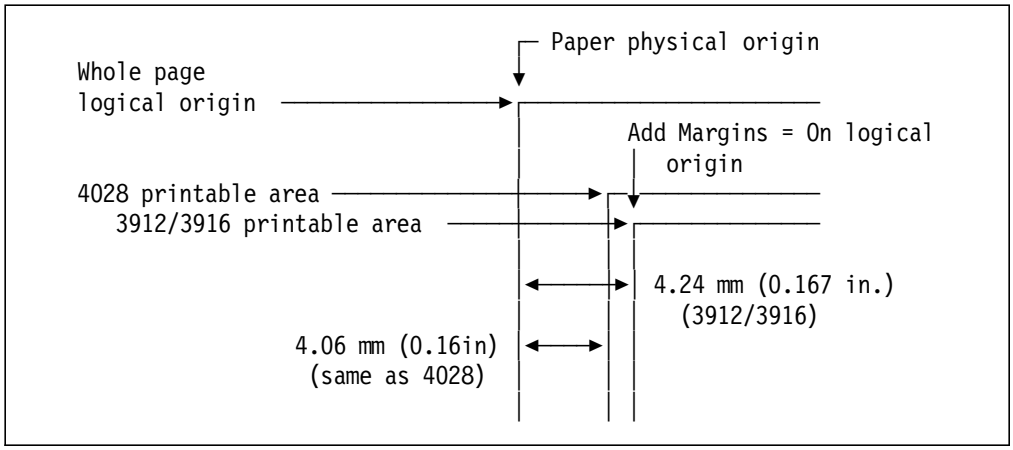

Figure 62. IBM 3912 and 3916 Printable Areas or Whole Page Formats

The following topics describe some examples of IPDS settings and how the data is positioned. Examples 1 to 10 contain the IPDS settings for:

1. AFP(*NO) and 3912/3916 printable area
2. AFP(*NO) and printable area same as 4028
3. AFP(*NO) and whole page
4. AFP(*YES) and 3912/3916 printable area
5. AFP(*YES) and printable area same as 4028
6. AFP(*YES) and whole page without QPRTVALS data area
7. AFP(*YES) and whole page with QPRTVALS data area
8. AFP(*YES) and 3912/3916 printable area with QPRTVALS data area
9. AFP(*NO) and 90 degree rotation
10. AFP(*YES) and 90 degree rotation

Note: After looking through the following examples, you may want to consider using the X and Y offsets in the printer to correctly position your output. If you adjust these values, be sure to carefully consider the results for all your applications since changing these values may negatively affect your other output.

5.6.2.1 Example 1: AFP(*NO) and 3912/3916 Printable Area

In this example the 3912/3916 unprintable area is reported to the AS/400 (Margins to System = On), and the data is positioned in the printable area (Add Margin = On). The device description is configured with AFP(*NO). Since the AFP parameter is *NO, the reported unprintable area is not used by the system.

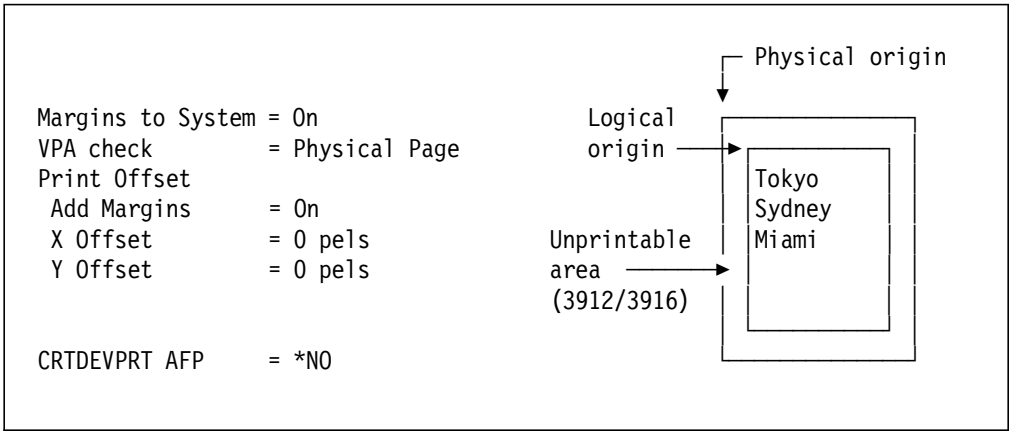

*Figure 63. Example 1: AFP(*NO) and 3912/3916 Printable Area*

The logical page origin is at the edge of the printable area, and the data is positioned from this point.

5.6.2.2 Example 2: AFP(*NO) and Printable Area same as IBM 4028

In this example the 4028 unprintable area is reported to the AS/400 (Margins to System = Off), and the data is positioned in the printable area (Add Margin = On). The printer device description is configured with AFP(*NO). Since the AFP parameter is *NO, the reported unprintable area is not used by the system.

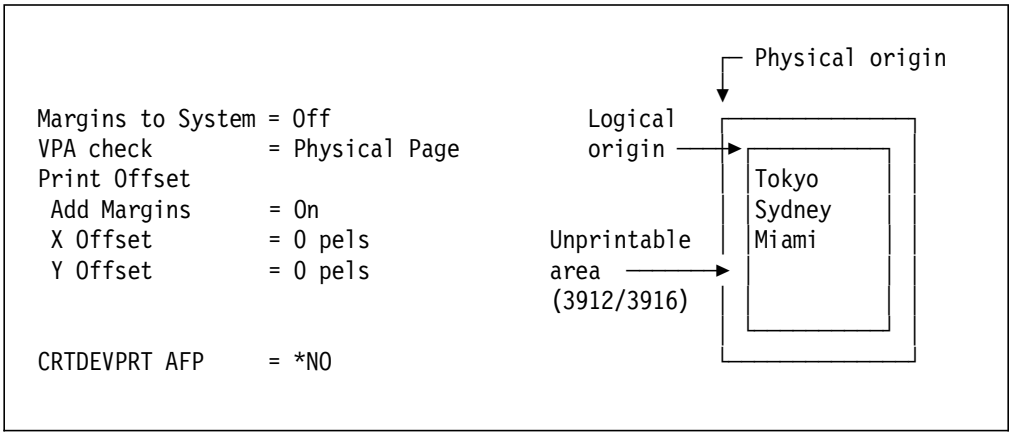

*Figure 64. Example 2: AFP(*NO) and Printable Area same as IBM 4028*

The logical page origin is at the edge of the printable area, and the data is positioned from this point.

5.6.2.3 Example 3: AFP(*NO) and Whole Page

In this example the whole page is selected (Add Margin = Off). The unprintable area reported to the AS/400 will not be used. Thus, the Margins to System parameter can be set to On or Off. The printer device description is configured with AFP(*NO).

```
                                                  Physical origin
                                        Logical
Margins to System = On or Off           origin  ---->  ┌──────────────┐
VPA check         = Physical Page                      │ ............ │
Print Offset                                           │ .ydney     . │
 Add Margins      = Off                                │ .iami      . │
 X Offset         = 0 pels              Unprintable    │ .          . │
 Y Offset         = 0 pels              area    ---->  │ .          . │
                                                       │ .          . │
                                                       │ ............ │
CRTDEVPRT AFP     = *NO                                └──────────────┘
```

*Figure 65. Example 3: AFP(*NO) and Whole Page*

The logical page origin is at the edge of the paper (same as physical origin). The data is positioned from this point, and any data in the unprintable area is not printed. In the example, the first line ″Tokyo″, the ″S″ of Sydney, and the ″M″ of Miami are in the unprintable area and are not printed.

5.6.2.4 Example 4: AFP(*YES) and 3912/3916 Printable Area

In this example the 3912/3916 unprintable area is reported to the AS/400 (Margins to System = On), and the data is positioned in the printable area (Add Margin = On). The printer device description is configured with AFP(*YES).

```
                                                  Physical origin
Margins to System = On
VPA check         = Physical Page       Logical
Print Offset                            origin  ---->  ┌──────────────┐
 Add Margins      = On                                  │ ┌──────────┐ │
 X Offset         = 0 pels              Unprintable     │ │........  │ │
 Y Offset         = 0 pels              area    ---->   │ │ .Tokyo . │ │
                                        (3912/3916)     │ │ .Sydney. │ │
                                                        │ │ .Miami . │ │
                                                        │ │........  │ │
CRTDEVPRT AFP     = *YES                                │ └──────────┘ │
                                                        └──────────────┘
```

*Figure 66. Example 4: AFP(*YES) and 3912/3916 Printable Area*

The 3912/3916 unprintable area is reported to the system (IPDS dialog), and the system uses this value to position the data. However, since the Add Margins parameter is set to On, the printer also adds the 3912/3916 unprintable border to position the data at print time.

The logical origin is thus moved by twice the value of the 3912/3916 unprintable border (one added by the system, and one added by the printer), and the data is positioned from this point.

5.6.2.5 Example 5: AFP(*YES) and Printable Area same as IBM 4028

In this example, the 4028 unprintable area is reported to the AS/400 (Margins to System = Off), and the data is positioned in the printable area (Add Margin = On). The device description is configured with AFP(*YES).

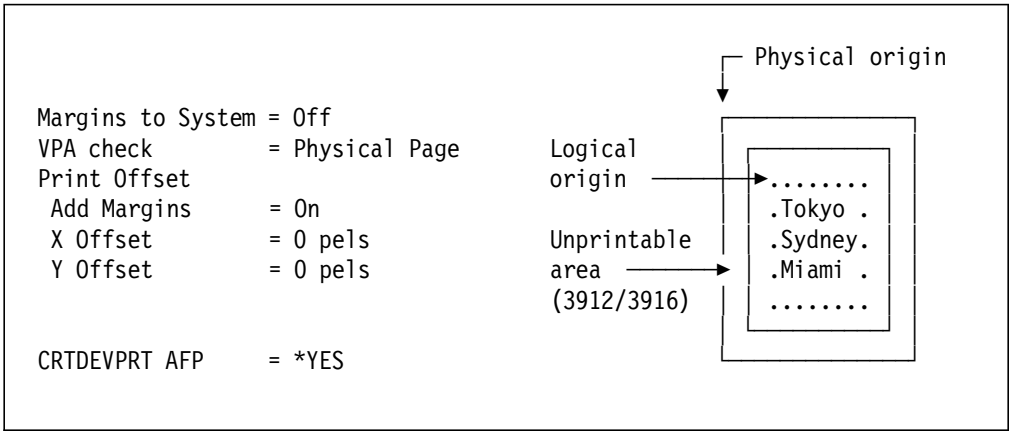

*Figure 67. Example 5: AFP(*YES) and Printable Area same as IBM 4028*

The 4028 unprintable area is reported to the system (IPDS dialog), and the system uses this value to position the data. However, since the Add Margins parameter is set to On, the printer also adds the 3912/3916 unprintable border to position the data at print time.

The logical origin is thus moved by the value of the 4028 unprintable border plus the value of the 3912/3916 unprintable border, and the data is positioned from this point.

5.6.2.6 Example 6: AFP(*YES), Whole Page without QPRTVALS Data Area

In this example the whole page is selected (Add Margin = Off), and the 3912/3916 unprintable area reported to the AS/400 will be used. (Margins to System = On). The printer device description is configured with AFP(*YES).

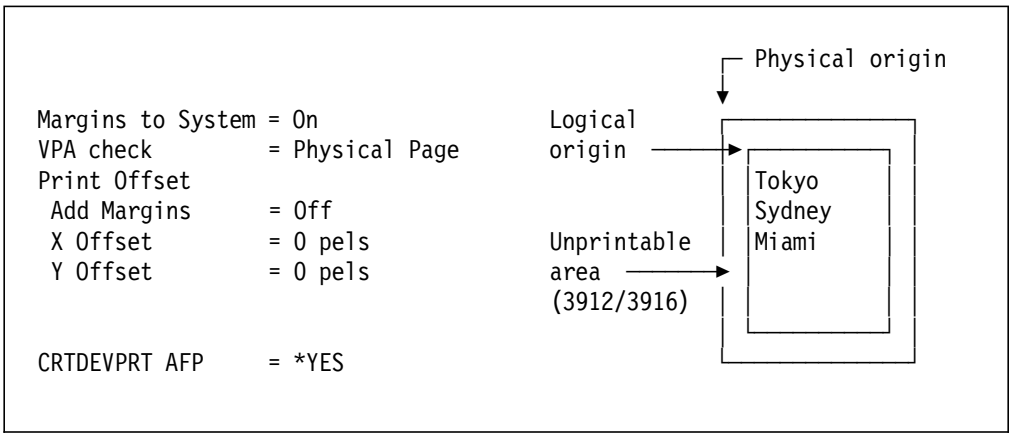

*Figure 68. Example 6: AFP(*YES), Whole Page, without QPRTVALS Data Area*

When using AFP(*YES) and the QPRTVALS data area is not present, or if present, position 1 is not set to ″Y″, the system uses the unprintable border information received from the printer (IPDS dialog) to position the data, and

places the data into the printable area. Because the printer is set to Add Margins = Off, the printer will not shift the data any more.

Note: For more information on the QPRTVALS data area, refer to 5.5, “QPRTVALS Data Area” on page 111, and the topic 5.5.1, “IBM 4028 and its Logical Page Origin” on page 112 applies also for IBM 3912/3916 page printers.

The logical page origin is at the edge of printable area. The data is positioned from this point.

5.6.2.7 Example 7: AFP(*YES), Whole Page with QPRTVALS Data Area

In this example, the whole page is selected (Add margin = Off), the unprintable area reported to the AS/400 will not be used (because of the data area). Thus, the Margins to System parameter can be set to On or Off. The printer device description is configured with AFP(*YES).

```
                                                  Physical origin
                                        Logical
Margins to System = On or Off           origin  ──►┌──────────────┐
VPA check         = Physical Page                  │ ............ │
Print Offset                                       │ .ydney     . │
 Add Margins      = Off                            │ .iami      . │
 X Offset         = 0 pels             Unprintable │ .          . │
 Y Offset         = 0 pels             area    ──►│ .          . │
                                       (3912/3916) │ .          . │
                                                   │ ............ │
CRTDEVPRT AFP     = *YES                           └──────────────┘

Data Area QPRTVALS position 1 set to Y
```

*Figure 69. Example 7: AFP(*YES), Whole Page, with QPRTVALS Data Area*

When AFP(*YES) is being used and the QPRTVALS data area is present with position 1 set to ″Y″, the system will not shift the logical page origin. Also, since the printer is set up with Add Margins = Off, the printer will not shift the data either. This keeps the logical origin at the edge of the paper.

Note: For more information on the QPRTVALS data area, refer to 5.5, “QPRTVALS Data Area” on page 111, and the topic 5.5.1, “IBM 4028 and its Logical Page Origin” on page 112 applies also for IBM 3912/3916 page printers.

The logical page origin is at the edge of the paper (same as physical origin). The data is positioned from this point, and any data in the unprintable area is not printed. In the example the first line ″Tokyo″, the ″S″ of Sydney, and the ″M″ of Miami are in the unprintable area and are not printed.

5.6.2.8 Example 8: AFP(*YES), 3912/3916 Printable Area and QPRTVALS Data Area

In this example the data is positioned in the printable area (Add Margin = On), and the area reported to the AS/400 will not be used (because of the data area). Thus, the Margins to System parameter can be set to On or Off. The printer device description is configured with AFP(*YES).

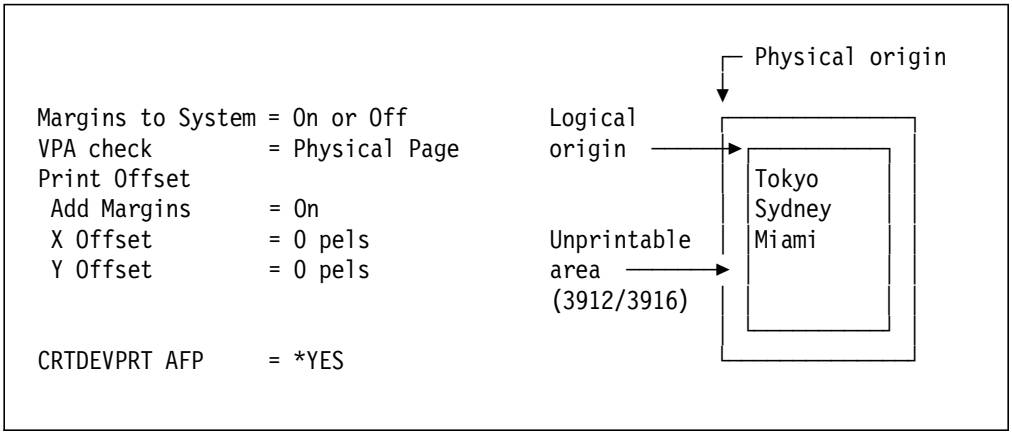

*Figure 70. Example 8: AFP(*YES), 3912/3916 Printable Area with QPRTVALS Data Area*

When AFP(*YES) is being used and the QPRTVALS data area is present with position 1 set to ″Y″, the system will not shift the logical page origin. However, because Add Margins = On, the printer will shift the logical origin to the printable area.

The logical page origin is at the edge of printable area. The data is positioned from this point.

5.6.2.9 Example 9: AFP(*NO) with 90 Degree Rotation

In this example the data is positioned using whole page (Add Margin = Off), and the area reported to the AS/400 will not be used because the device is configured AFP(*NO). Thus, the Margins to System parameter can be set to On or Off. The printer device description is configured with AFP(*NO).

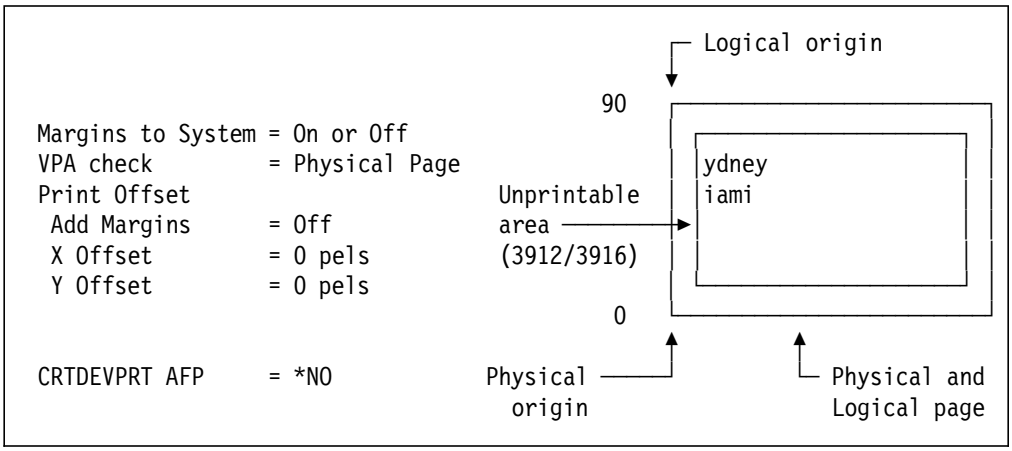

*Figure 71. Example 9: AFP(*NO) with 90 Degree Rotation*

When the page size specified is the same as the paper size, the physical and logical pages are the same. For AFP(*NO), the system does not offset the page or change the page size. Thus, with 90 degree rotation, the first line ends up in the unprintable area and is lost. In this example, the first line ″Tokyo″, the ″S″ of Sydney, and the ″M″ of Miami are in the unprintable area and are not printed.

Note: If you had Add Margins = ON, the first characters would print but another line would be lost. This is because the logical page would be shifted by the printer up and to the right (when viewing the text normally) by the amount of the 3912/3916 unprintable area.

5.6.2.10 Example 10: AFP(*YES) with 90 Degree Rotation

In this example the data is positioned using whole page (Add Margin = Off), and the area reported to the AS/400 is the 3912/3916 unprintable area (Margins to System = On). The printer device description is configured with AFP(*YES).

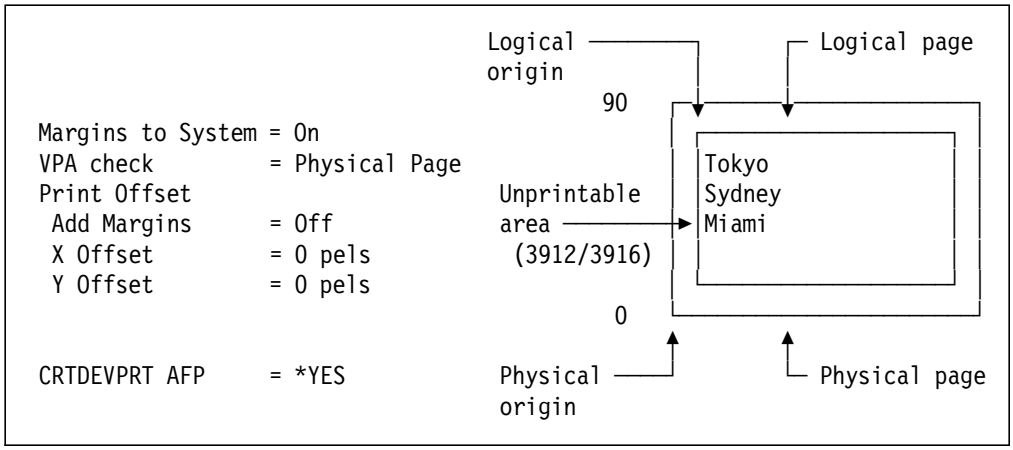

*Figure 72. Example 10: AFP(*YES) with 90 Degree Rotation*

When the page size specified is the same as the paper size, the physical and logical pages are normally the same. For AFP(*YES), the system changes the logical page size (shrinks it) to fit inside the unprintable area. The system also offsets the page by the amount of the unprintable area reported back to the system. Thus, with 90 degree rotation, the first line ends up moved to the printable area. This could cause some lines to be truncated on the right or lost off the bottom of the page.

Note: If you had Add Margins = ON, you would lose the top line of output and your data would be shifted even farther right (possibly causing you to have more data truncated). This is because the logical page would be shifted by the printer up and to the right (when viewing the text normally) by the amount of the 3912/3916 unprintable area.

5.6.3 IBM 3912 and 3916 XPA/PC RPQ Enhancements

At the time this manual was published a new RPQ was made available which has implications on the print output placement on IBM 3912 and 3916 printers. These RPQs are available from the factory (8B4020 for 3912, 8B4021 for 3916) and as field upgrades (8B4022 for 3912, 8B4023 for 3916). If you are unsure if you have the RPQ installed, follow these steps:

1. Print the settings as shown in 5.6.1, “IPDS Menu Settings (Model AS1)” on page 118.
2. If the first page shows a **Printable Area** submenu under the **PRINTER SETUP MENU** the RPQ is installed.

The following sections discuss the enhancements in the RPQ.

5.6.3.1 Twinax Non-IPDS Enhancements

The enhancements for a twinax non-IPDS environment include:

- Expanded Printable Area (XPA) See 5.6.3.3, “Expanded Printed Area (XPA)” for more information.
- Improved font mapping

  The increased PCL font selection provides more accurate substitution for many requested fonts. Also, you can access some additional fonts, such as optical character reader (OCR), from PCL font cards.
- Orientation of each drawer

  The **NETWORK PRINT MENU** now has a “Non IPDS Orient.” setting for each drawer, instead of one which covers all drawers.
- Auxiliary feeder as third paper source

  You can select the auxiliary feeder by specifying that you want to print from drawer 3 from your SCS application. This will translate to X′03′ in the SD parameter of the Page Presentation Media (PPM) command sent to the printer.
- Set Exception Action DCA Device Control support

  This allows for better compatibility with the 3812 and 3816 printers.

5.6.3.2 IPDS Enhancements

The enhancements for an IPDS environment include:

- Expanded Printable Area (XPA) See 5.6.3.3, “Expanded Printed Area (XPA)” for more information.
- Auxiliary feeder as third paper source

  You can select the auxiliary feeder by specifying that you want to print from drawer 3 from your application.
- Three new resident fonts

  The new fonts are:

  – Gothic Text 13.3 pitch, FGID 203

  – Gothic Text 20 pitch, FGID 283

  – Gothic Text 27 pitch, FGID 290

  This brings the total number of resident fonts up to 35.
- Twinax link-level 1KB buffer

  Two buffer size options, 256 bytes (the default) and 1024 bytes (1KB), are now available. The 1KB option is available only on the AS/400 Twinax Workstation Controller and the 5394 Remote Control Unit Release 2.2 or higher, or the 5494 Remote Control Unit.

5.6.3.3 Expanded Printed Area (XPA)

With this RPQ the printer supports an expanded printable area for both IPDS and non-IPDS modes. You can select this option from the operator panel. For best results we recommend that you use the XPA only when absolutely necessary. The XPA is not available for either parallel or serial operations.

In XPA mode the following two things happen:

- Unprintable areas on all sides are reduced.
- Characters and spaces in the text are compressed.

These will now be discussed in more detail.

Reduction of Unprintable Areas: Using the XPA option reduces the unprintable area on the page. The size of the unprintable areas depends on the font used. You should only use the XPA option with Letter, A4 and Legal paper sizes. Other paper sizes, such as B5, A5, Executive and Envelope can print too close to the edge of the paper and cause a degradation of print quality and potential damage to the printer mechanical parts.

Compression of Characters and Spaces: Compression shrinks the text 2%, which results in a resolution of 306.5 compressed pels in the horizontal direction and 305.02 compressed pels in the vertical direction instead of the normal resolution of 300 x 300. This prints all data that prints on an edge-to-edge printer, but allows the small border required for quality operation of these printers.

Because of this compression, we recommend that if you have jobs that are very sensitive to character positioning on the page, such as those with preprinted forms, you should check to verify that you can use the XPA option with this form. Also, if you print OCR characters you should check a sample printout for scanability. You may be able to improve results by changing the **Print Darkness** value in the **SETUP MENU** to “Light.”

Because there is still an unprintable border, it is possible that some text could still be clipped under certain circumstances. For example, if the first line of text is positioned for 6 LPI but a taller than normal font is used, the tops of the letters could be clipped by the unprintable area.

5.7 IBM 3912/3916/4028 Font Enhancements

The IBM 3912/3916 IPDS printers, as originally shipped, had 32 internal fonts. These fonts were the same ones that were shipped on the IBM 4028 IPDS printer. The computer output reduction (COR) and multiup functions for IPDS printers on the AS/400 were originally designed to make use of fonts available in the IBM 3812/3816/3930 series of printers. Because of the differences in the font sets of the 3912/3916/4028 printers, the AS/400 had to handle these printers differently when doing these functions.

- Normally for COR output, a 13.3 CPI font is used when shrinking 10 CPI output which meant that for a line printer the output would be reduced to fit on to 8 1/2″ X 11″ paper. Because the 4028, 3912, and 3916 printers did not have a 13.3 CPI font available internally, a 15 CPI font was used instead to make sure the data would fit on the paper. This produced smaller print and a wider right margin than many users would like.
- When doing multiup, many times a 27 CPI font is used by the system in order to fit as much data as is possible into one partition of the page. Because the 4028, 3912, and 3916 printer′s smallest internal font was a 20 CPI font, that font was used instead. In many cases this produced overlapping output between the partitions.

In response to customer requirements, the 3912/3916 printers now offer 3 additional fonts. If a printout of your printers IPDS resident fonts shows just 32

resident fonts, you have the original 4028 equivalent font set. Printers at this level may be updated by ordering an RPQ 8B4024 for the 3912/3916. For more information, contact your IBM marketing representative. There is now a 13.3 CPI font (FGID 203), a 27 CPI font (FGID 290), and a new 20 CPI font (FGID 283). Because these fonts are now available, support has been added to the AS/400 to make use of these fonts for COR and multiup if the printer has them. This support is available in V3R1, and is also available via PTF SF16523 for V2R2, PTF SF17070 for V2R3, and PTFs SF17073 and SF17075 for V3R0.5. This support also includes making use of either font 203 or font 204 (13.3 CPI), or font 290 (27 CPI) for the 4028 printer if these fonts are resident in the printer through the use of font cards.

Note: Font 283 is a shorter 20 CPI font than the original 20 CPI font 281. If font 283 is available on the printer, the AS/400 will utilize this font for multiup situations where a 20 CPI font is needed. This may improve the readability of dense multiup output. Font 283 was already supported when available through the use of a font card on the 4028 printer.

5.8 Work with AFP (WRKAFP) Command

The WRKAFP command can be used to set the appropriate values in a data area so that you can tell the AFP printer writer what special functions you would like to make use of. These functions are:

- Issuing a blank page after separator pages and odd-numbered page spooled files for continuous forms printers, such as 3835 and 3900 printers.

  PTF SF16187 is required for V2R2. This fix is included in the base code from V2R3.

- Overriding the hardware setting for form size on the 4028 (3912/3916) and impact printers such as the 4224, 4230, and 4234.

  PTF SF18510 for V2R2, SF20670 for V2R3, or SF20672 for V3R0.5 is required to implement this fix. This fix is included in the base code of V3R1.

- Forcing PSF/400 to always substitute host resident fonts for printer resident fonts when printing to a printer which supports printer resident fonts.

  See 5.3, “Disabling Printer Resident Fonts Support” on page 105, for the PTFs needed to implement this function in V2R2, V2R3, and V3R0.5. This fix is included in V3R1.

- Storing overlays and page segments in printer memory across spooled file boundaries.

  This function is only available with V3R1, and is part of the base code.

```
                              Work with AFP (WRKAFP)

 Type choices, press Enter.

   Printer device being used . . . . . . . .     PRT3816    Name
   Suppress blank page . . . . . . . . . . .     *NO        *YES, *NO
   Page size control . . . . . . . . . . . .     *NO        *YES, *NO
   Disable resident fonts  . . . . . . . . .     *YES       *YES, *NO
   Disable resource retention  . . . . . . .     *NO        *YES, *NO



 F3=Exit   F12=Cancel
```

Figure 73. Work with AFP Command Screen

The WRKAFP command performs the following:

1. Creates or changes a data area in QGPL. If the data area is moved or deleted from QGPL, the function you desire will not be done. When the data area is created, the entire 40 bytes of the data area are initialized. When an existing data area is changed, only byte 23 is changed.
2. Works with a data area named the same as the printer device description being used. The data area must use such a name in order for the selected function to be performed. You may have a separate data area for each printer, if required.
3. Sets a value in the data area based upon the values for parameters in the WRKAFP command. Unexpected results will occur if these or any other values in the data area are modified.

- **Suppress blank page**

  If you are printing to a 3835 or 3900, you may wish to not have blank pages printed after separator pages or spooled files containing an odd number of pages. The printer writer will normally issue a blank page under those conditions. In order to prevent the issuance of blank pages, select *YES for the suppress blank page parameter.

- **Page size control**

  If you are printing to a 4028 or impact printer, you may want to stop having to set the form size at the printer. The printer file can be used to set the form size. Specifying page size control *YES will permit the printer file to be used to set the form size. Having to set the form size at the printer is the normal mode of operation.

- **Disable resident fonts**

  This parameter permits you to force the AFP printer writer to not use a printer's resident fonts. Setting disable resident fonts *YES will cause the writer to always substitute fonts stored in host libraries for printer resident fonts referenced in spooled files. See 5.3, "Disabling Printer Resident Fonts Support" on page 105, for detailed information.

- **Disable resource retention**

  With new support added in V3R1, PSF/400 stores page segments and overlays in the printer across spooled file boundaries. This means PSF/400 minimizes downloading resources. If you don't want PSF/400 to store page segments and overlays in the printer across spooled file boundaries, select

*YES for the disable resource retention. Users with severe security concerns may wish to use this function.

In order for an AFP printer writer to detect that its data area has been created or changed, you must either (1) end (ENDWTR) and then start (STRPRTWTR) the printer writer or (2) hold (HLDWTR) and then release (RLSWTR) the printer writer.

The source code for the command is shown below. This command is designed for V2R2, V2R3, V3R0.5, and V3R1.

Note: Some statements are only for V3R1; these statements are flagged "V3R1 Only" on the right side of the listing.

```
WRKAFP: CMD    PROMPT('Work with AFP')
     PARM  KWD(DEV) +
           TYPE(*NAME) RSTD(*NO)  +
           MIN(1) MAX(1) +
           PASSATR(*NO) PROMPT('Printer device being used')
     PARM  KWD(SBP) TYPE(*CHAR) MIN(0) DFT(*NO) RSTD(*YES) +
           LEN(4) PROMPT('Suppress blank pages') +
           SPCVAL(*YES *NO)
     PARM  KWD(PSC) TYPE(*CHAR) MIN(0) DFT(*NO) RSTD(*YES) +
           LEN(4) PROMPT('Page size control') +
           SPCVAL(*YES *NO)
     PARM  KWD(DRF) TYPE(*CHAR) MIN(0) DFT(*NO) RSTD(*YES) +
           LEN(4) PROMPT('Disable resident fonts') +
           SPCVAL(*YES *NO)
     PARM  KWD(DRR) TYPE(*CHAR) MIN(0) DFT(*NO) RSTD(*YES) +      V3R1 Only
           LEN(4) PROMPT('Disable resource retention') +          V3R1 Only
           SPCVAL(*YES *NO)                                       V3R1 Only
```

Execute the following to compile this command:

```
CRTCMD CMD(lib_name/WRKAFP) PGM(lib_name/WRKAFP)
```

The source code for the command processor program is shown below. This command processor program is designed for V2R2, V2R3, V3R0.5, and V3R1.

Note: Some statements are only necessary for V3R1, these statements are flagged "V3R1 Only" in the right side of the listing.

```
PGM PARM(&DEV &SBP &PSC &DRF)                       V2R2, V2R3, V3R0.5 Only
PGM PARM(&DEV &SBP &PSC &DRF &DRR)                                 V3R1 Only
DCL  &DEV TYPE(*CHAR) LEN(10)
DCL  &SBP TYPE(*CHAR) LEN(4)   /* Suppress blank page         */
DCL  &PSC TYPE(*CHAR) LEN(4)   /* Page size control           */
DCL  &DRF TYPE(*CHAR) LEN(4)   /* Disable resident fonts      */
DCL  &DRR TYPE(*CHAR) LEN(4)   /* Disable resident resource   */  V3R1 Only
/* The first eight bytes of variable &VAL are WWPDTRHR.       */
/* For V2R2 the next statement should use a length of 24 and  */
/* not include the last 16 bytes of zeros.                     */
DCL  &VAL TYPE(*CHAR) LEN(40) +                                    Not V2R2
          VALUE(X'E6E6D7C4E3D9C8D90000000000000000000+             Not V2R2
                 0000000000000000000000000000000000000000000000') Not V2R2
DCL  &VAL TYPE(*CHAR) LEN(24) +                                    V2R2 Only
          VALUE(X'E6E6D7C4E3D9C8D90000000000000000000+             V2R2 Only
                 0000000000000')                                   V2R2 Only
DCL  &MSG TYPE(*CHAR) LEN(40)
DCL  &ONEBYTE TYPE(*CHAR) LEN(1)
```

```
DCL  &TOTAL1 TYPE(*DEC) LEN(2) VALUE(0)
/*************************************************************/
/* Determine the value for byte 23 of the designated data area*/
/*************************************************************/
IF (&SBP=*YES) CHGVAR VAR(&TOTAL1) VALUE(&TOTAL1 + 8)
IF (&PSC=*YES) CHGVAR VAR(&TOTAL1) VALUE(&TOTAL1 + 4)
IF (&DRR=*YES) CHGVAR VAR(&TOTAL1) VALUE(&TOTAL1 + 1)            V3R1 Only
IF (&DRF=*YES) CHGVAR VAR(&TOTAL1) VALUE(&TOTAL1 + 2)
IF (&TOTAL1=0) GOTO CMDLBL(COMMAND)
IF (&TOTAL1=1) THEN(DO)                                          V3R1 Only
  CHGVAR  VAR(%SUBSTRING(&VAL 23 1)) VALUE(X'10')                V3R1 Only
  GOTO CMDLBL(COMMAND)                                           V3R1 Only
ENDDO                                                            V3R1 Only
IF (&TOTAL1=2) THEN(DO)
  CHGVAR  VAR(%SUBSTRING(&VAL 23 1)) VALUE(X'20')
  GOTO CMDLBL(COMMAND)
ENDDO
IF (&TOTAL1=3) THEN(DO)                                          V3R1 Only
  CHGVAR  VAR(%SUBSTRING(&VAL 23 1)) VALUE(X'30')                V3R1 Only
  GOTO CMDLBL(COMMAND)                                           V3R1 Only
ENDDO                                                            V3R1 Only
IF (&TOTAL1=4) THEN(DO)
  CHGVAR  VAR(%SUBSTRING(&VAL 23 1)) VALUE(X'40')
  GOTO CMDLBL(COMMAND)
ENDDO
IF (&TOTAL1=5) THEN(DO)                                          V3R1 Only
  CHGVAR  VAR(%SUBSTRING(&VAL 23 1)) VALUE(X'50')                V3R1 Only
  GOTO CMDLBL(COMMAND)                                           V3R1 Only
ENDDO                                                            V3R1 Only
IF (&TOTAL1=6) THEN(DO)
  CHGVAR  VAR(%SUBSTRING(&VAL 23 1)) VALUE(X'60')
  GOTO CMDLBL(COMMAND)
ENDDO
IF (&TOTAL1=7) THEN(DO)                                          V3R1 Only
  CHGVAR  VAR(%SUBSTRING(&VAL 23 1)) VALUE(X'70')                V3R1 Only
  GOTO CMDLBL(COMMAND)                                           V3R1 Only
ENDDO                                                            V3R1 Only
IF (&TOTAL1=8) THEN(DO)
  CHGVAR  VAR(%SUBSTRING(&VAL 23 1)) VALUE(X'80')
  GOTO CMDLBL(COMMAND)
ENDDO
IF (&TOTAL1=9) THEN(DO)                                          V3R1 Only
  CHGVAR  VAR(%SUBSTRING(&VAL 23 1)) VALUE(X'90')                V3R1 Only
  GOTO CMDLBL(COMMAND)                                           V3R1 Only
ENDDO                                                            V3R1 Only
IF (&TOTAL1=10) THEN(DO)
  CHGVAR  VAR(%SUBSTRING(&VAL 23 1)) VALUE(X'A0')
  GOTO CMDLBL(COMMAND)
ENDDO
IF (&TOTAL1=11) THEN(DO)                                         V3R1 Only
  CHGVAR  VAR(%SUBSTRING(&VAL 23 1)) VALUE(X'B0')                V3R1 Only
  GOTO CMDLBL(COMMAND)                                           V3R1 Only
ENDDO                                                            V3R1 Only
IF (&TOTAL1=12) THEN(DO)
  CHGVAR  VAR(%SUBSTRING(&VAL 23 1)) VALUE(X'C0')
  GOTO CMDLBL(COMMAND)
ENDDO
IF (&TOTAL1=13) THEN(DO)                                         V3R1 Only
  CHGVAR  VAR(%SUBSTRING(&VAL 23 1)) VALUE(X'D0')                V3R1 Only
```

```
  GOTO CMDLBL(COMMAND)                                          V3R1 Only
ENDDO                                                           V3R1 Only
IF (&TOTAL1=14) THEN(DO)
  CHGVAR  VAR(%SUBSTRING(&VAL 23 1)) VALUE(X'E0')
  GOTO CMDLBL(COMMAND)
ENDDO
IF (&TOTAL1=15) THEN(DO)                                        V3R1 Only
  CHGVAR  VAR(%SUBSTRING(&VAL 23 1)) VALUE(X'F0')               V3R1 Only
  GOTO CMDLBL(COMMAND)                                          V3R1 Only
ENDDO                                                           V3R1 Only
COMMAND:
/*************************************************************/
/* Change the data area                                      */
/*************************************************************/
CHGVAR VAR(&ONEBYTE) VALUE(%SUBSTRING(&VAL 23 1))
CHGDTAARA DTAARA(QGPL/&DEV (23 1)) VALUE(&ONEBYTE)
MONMSG MSGID(CPF1015) EXEC(GOTO CMDLBL(NODTAARA))
CHGVAR &MSG ('WRKAFP changed data area ' *CAT &DEV)
GOTO EXIT
NODTAARA:
/*************************************************************/
/* Create the data area                                      */
/*************************************************************/
CRTDTAARA DTAARA(QGPL/&DEV) TYPE(*CHAR) LEN(40) VALUE(&VAL)
CHGVAR &MSG ('WRKAFP created data area ' *CAT &DEV)
EXIT:
SNDMSG MSG(&MSG) TOUSR(*REQUESTER)
ENDPGM
```

Execute the following to compile this program:

```
CRTCLPGM PGM(lib_name/WRKAFP) SRCFILE(lib_name/QCLSRC)
```

To verify that you have programmed both the command and the CL program correctly, please check the following after executing the command for the first time:

1. The data area is located in QGPL.
2. The data area has the same name as the printer device description you wish to use.
3. The first 8 characters of the data area are: WWPDTRHR
4. The next 32-bytes contain zeroes, except for the 23rd byte. The 23rd byte should have the a value in it based on input to the WRKAFP command.

Note: The data area created/modified by WRKAFP may also be used by IBM service when an internal trace of the AFP printer writer is required. Service may ask you to modify this data area. Once the service trace has been taken, you will have to restore the data area to the value you require. Do this by first deleting the data area in use by executing the following command:

```
DLTDTAARA DTAARA(QGPL/data_area_name)
```

Then recreate the data area using the WRKAFP command.

You can also set the values by creating or changing the data area directly. Let's say the printer device description in use is named PRT01. First the data must be created. The command to be run on AS/400 system is:

```
CRTDTAARA DTAARA(QGPL/PRT01)
          TYPE(*CHAR)
          LEN(40)
     VALUE(X'E6E6D7C4E3D9C8D900000000000000000000000000000000
                                 00000000000000000000000000000000')
```

Note: For V2R2, the length of the data area is only 24 bytes. For V2R2, change the LEN parameter above to be 24 and don't include the last 16 bytes of zeros.

Then you must decide which of the functions (discussed above) you want to use. Here are the CHGDTAARA commands to use based on the function you want to implement.

Controlling blank pages on 3835 and 3900 printers

Run this command:

```
CHGDTAARA DTAARA(QGPL/PRT01 (23 1)) VALUE(X'80')
```

Setting forms sizes on the 4028 and impact printers

Run this command:

```
CHGDTAARA DTAARA(QGPL/PRT01 (23 1)) VALUE(X'40')
```

Disable resident fonts support

Run this command:

```
CHGDTAARA DTAARA(QGPL/PRT01 (23 1)) VALUE(X'20')
```

Managing resources loaded into the printer

Run this command:

```
CHGDTAARA DTAARA(QGPL/PRT01 (23 1)) VALUE(X'10')
```

Chapter 6. Advanced Host Print Transform Customization

Using the host print transform function eliminates the problems of different ASCII data streams and limited printer support, as well as providing other printing advantages. Customizing printers that use host print transform function provides more functions, for more printer types, than other methods of customizing printers. Using the workstation customization functions you can:

- Customize the functional characteristics of an ASCII printer.
- Customize the functional characteristics and specify all necessary parameters required to support a normally unsupported ASCII printer.

This chapter provides the following information:

- Host print transform overview
- Host print transform V3R1 enhancements
- Host print transform supported printers
- Customizing ASCII printers that use the host print transform function
  - Preparing for customization
  - Retrieving the workstation customizing source
  - Editing the workstation customizing source object
  - Understanding the transform table
  - Creating the workstation customizing object
  - Specifying the workstation customizing object
- Workstation customizing object hints and tips
- PCL5 language overview

The manual *AS/400 Workstation Customization Programming*, SC41-3605, contains detailed information on the host print transform.

6.1 Host Print Transform Functional Overview

Up until now, you have been able to attach ASCII printers to the AS/400 using the three main approaches: via an ASCII workstation controller, via a non-programmable terminal, or via a PC. Taking into account the different emulation programs that you could use, there are approximately 15 different ways to attach an ASCII printer.

The AS/400 host print transform has three main objectives:

1. To provide a single method of configuring an ASCII printer on the AS/400 regardless of the attachment method.
2. To help customers to fully utilize the functions available on their ASCII printers.
3. Perhaps most importantly, to ensure consistent output regardless of the method of attachment.

The host print transform is an OS/400 function that converts an SNA character string (SCS) data stream into an ASCII data stream. You can use the host print

transform on the AS/400 system to convert the EBCDIC data stream to an ASCII data stream for ASCII printers attached in the following ways:

- ASCII printers attached to twinaxial displays.
- ASCII printers attached to a personal computer through 5250 emulation products (such as Client Access/400).
- ASCII printers directly attached to the AS/400 system through the ASCII workstation controller.
- AS/400 ASCII LAN-attached printers (new in Version 3.0 Release 1.0).

Note: The host print transform function can also be used when you send a spooled file with the command SNDTCPSPLF (TCP/IP LPD-LPR), or when using the remote system print function by specifying TRANSFORM(*YES) in the CRTOUTQ command.

The host print transform lets you choose among a wide number of supported ASCII printers. Alternatively, if your printer is not supported, it is possible to create your own “printer profile,” called a workstation customization object (WSCST). These profiles are similar in function to the printer function tables (PFT) used under the Work Station Function program of Client Access/400. A new parameter in the device description, the manufacturer type and model, links the printer device to the profile selected.

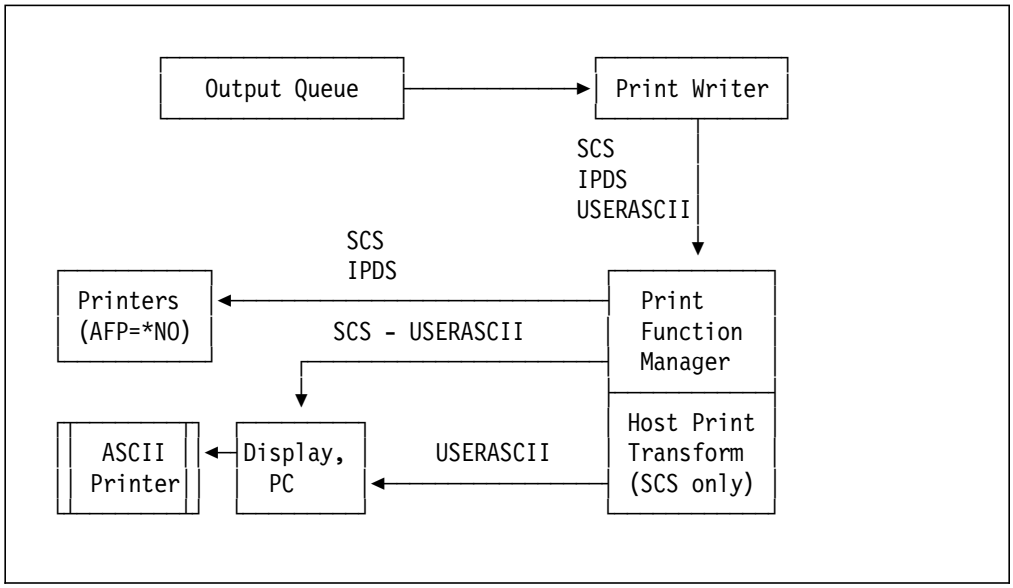

Figure 74. Host Print Transform Functional Process

The host print transform function allows the SCS-to-ASCII data stream conversion to take place on the AS/400 system instead of on the emulators. Having the conversion take place on the AS/400 system provides the following advantages:

- Consistent output for most ASCII printers:

  The host print transform function is capable of supporting many different types of ASCII data streams. For example, the Hewlett-Packard Printer Control Language (PCL), the IBM Personal Printer Data Stream (PPDS), and the Epson** FX and LQ data streams.

  Having the conversion done on the AS/400 system ensures that the resulting ASCII data stream provides the same printed output regardless of the

emulator the printer is physically attached to. Previously, you would likely experience different output when printing the exact same spooled file to the exact same print with different emulation products.

- 3812 SCS printer emulation:

  The host print transform function is based on the 3812 SCS printer emulation of Client Access/400 Work Station Function (WSF). This level of function allows you to use the functions provided by your ASCII printer. However, you cannot perform functions that your printer does not support.

- Support for many different ASCII printers:

  Currently, each emulator supports a limited number of ASCII printers. With the host print transform function, most IBM printers and a large number of OEM printers are supported.

6.1.1 Host Print Transform V3R1 Enhancements

With Version 3.0 Release 1.0 the host print transform function provides the following enhancements:

- **Support for IOCA image imbedded in the SCS data stream**

  With V3R1, the host print transform has the ability to process IOCA image imbedded in the SCS data stream. This is done by OfficeVision/400 with the graphic instruction. Facsimile Support/400* also generates such a data stream, and is also supported by the host print transform.

  Note: The OV/400 graphic instruction allows you to imbed IOCA or GOCA objects into the SCS data stream. Only IOCA objects are supported by the host print transform.

  This allows you to store an image like a signature with your OV/400 document and be able to print it on printers such as HP LaserJets and IBM 4029s. It also gives you an easy way to print faxes from Facsimile Support/400 to these ASCII printers.

  Printing an image through the host print transform tends to be slow. A big reason for this is that most images on the AS/400 are 240 pel, and the host print transform must convert these images to 300 pel before printing on ASCII laser printers.

  For V3R1, code to generate the ASCII image does not go through the WSCST object, so there are no new tags to support this function. This is why it is limited to laser printers using the PPDS or PCL data streams.

- **New drawer select tag**

  The DWRNBR (Drawer number) tag selects the printer output paper drawer. This tag is only used if the drawer number is three or greater. For drawer numbers one or two, the DWRSLT tag is used. The syntax for the DWRNBR tag is as follows:

```
:DWRNBR
  VAROFFSET= Offset to variable in PCL5
  VARLEN= Variable length
  VARTYPE= Variable type HIGHLOW|LOWHIGH|CHRDEC|CHRHEX
  DATA = ASCII control sequence
```

  This tag can be used in two ways. If the VARLEN is nonzero, the drawer number from the print job will be placed in the ASCII control sequence at the offset specified by the VAROFFSET. If the VARLEN is zero, the unchanged

ASCII control sequence will be used for all requests of drawer number 3 through 255.

For drawers 3 through 255, the paper size that is configured for drawer 1 will be used for all COR calculations.

- **New function for PAGLENI and PAGLENL tags**

  For printers with the PRTDTASTRM tag defined as HPPCL4 or HPPCL5 the PAGLENI and PAGLENL tags have been redefined. The PAGLENI tag is now used to send a *Set top margin* command. The top margin will be set to 1/4 inch (6.35 mm) with this command. The PAGLENL tag is now used to send a *Set text length* command. The text length will be equal to the page length minus 1/2 inch (12.7 mm). This will set both the top and bottom margins to 1/4 inch (6.35 mm).

  To implement this new function in your WSCST object, refer to 6.4.2, “Customizing the Top Margin” on page 170 for more detailed information.

  Note: This new function is also available for V2R3 with PTF SF18795 and V3R0.5 with PTF SF18048.

- **New Manufacturer type and model objects**

  In Version 3.0 Release 1.0 OS/400 includes new manufacturer type and model (MFRTYPMDL) objects:

MFRTYPMDL	Printer Description
*IBM3912HP	IBM 3912 Page Printer (HP Mode)
*IBM4230	IBM 4230-4S3 Printer (IBM Mode)
*IBM4770	IBM 4770 InkJet Transaction Printer
*IBM6408EP	IBM 6408-A00 Printer (Epson mode)
	IBM 6408-CTA Printer (Epson Mode)
*IBM6412	IBM 6412-A00 Printer (IBM Mode)
	IBM 6412-CTA Printer (IBM Mode)
*IBM6412EP	IBM 6412-A00 Printer (Epson Mode)
	IBM 6412-CTA Printer (Epson Mode)
*HP310	HP DeskJet** 310 (Black print only)
*HP520	HP DeskJet 520
*HP560C	HP DeskJet 560C
*XRX4215MRP	Xerox** 4215/MRP (HP Mode)
*XRX4219MRP	Xerox 4219/MRP (HP Mode)
*XRX4220MRP	Xerox 4220/MRP (HP Mode)
*XRX4235	Xerox 4235 Laser Printing (HP Mode)
*XRX4700II	Xerox 4700 II Color Document printer (HP Mode)

  Note: For the IBM 6408 and 6412, Epson mode is recommended for the following reasons:

  1. Document print quality will be restored after switching from fonts which force a quality change (such as OCR, 20 CPI).
  2. The 15 CPI font is host selectable.

6.2 Host Print Transform Supported Printers

The host print transform converts the SCS data stream just before it is sent to one of the existing emulators. The spooled file contains SCS data and not the converted ASCII data. The host print transform function also works with jobs sent directly to the printer (SPOOL(*NO) on the printer file).

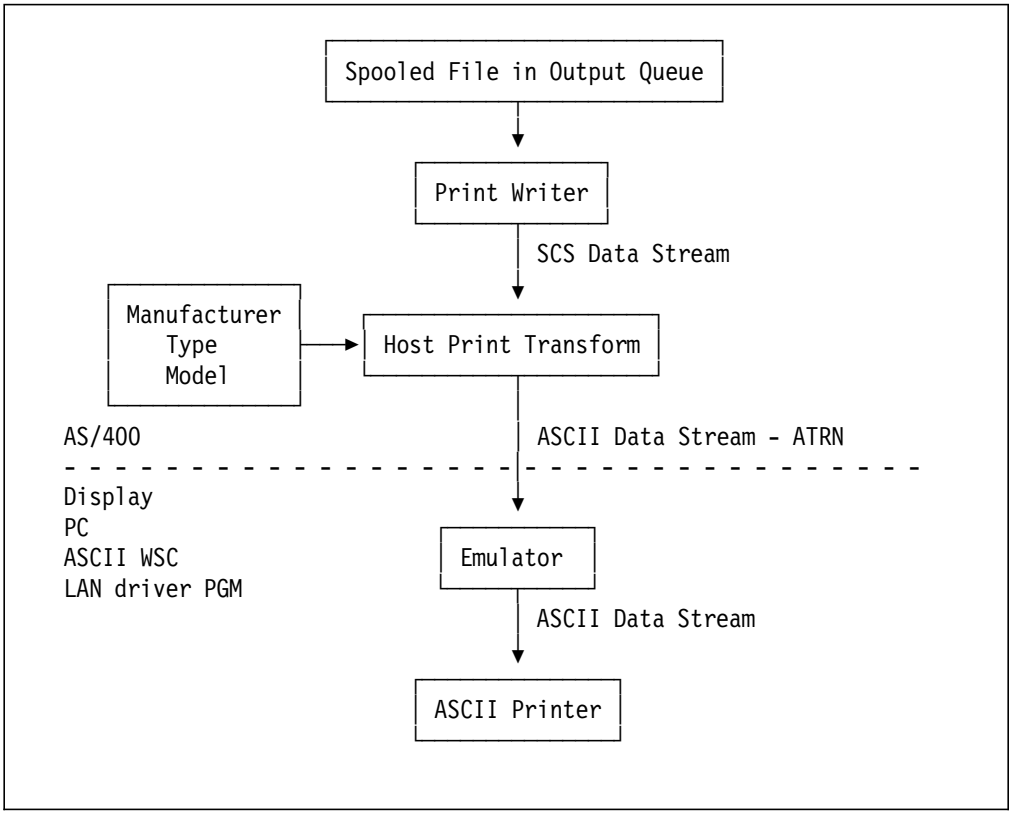

Figure 75. How the Host Print Transform Function Works

ASCII printers support several different compositions of ASCII data streams. The host print transform function generates an ASCII printer data stream for a number of IBM and non-IBM printers.

The ASCII data stream is passed through the existing emulator using the SCS ASCII transparency (ATRN) command. The existing emulator deletes the ASCII transparency commands and passes the ASCII data stream generated by the host print transform function to the ASCII printer.

Note: The emulator must support the SCS transparency (ATRN) command to be used with the host print transform function.

Workstation customizing objects that come with the host print transform function can be updated by the user to change or add characteristics to a particular printer. Also, if the host print transform function does not have a workstation customizing object for a printer you want to use, you can create your own. OS/400 Version 3.0 Release 1.0 includes manufacturer type and model (MFRTYPMDL) objects for the following IBM ASCII printers:

MFRTYPMDL	Printer Description
*IBM2380	IBM 2380 Personal Printer Series II
*IBM2381	IBM 2381 Personal Printer Series II

*IBM2390	IBM 2390 Personal Printer Series II
*IBM2391	IBM 2391 Personal Printer Series II
*IBM3812	IBM 3812 Pageprinter
*IBM3816	IBM 3816 Pageprinter
*IBM3912HP	IBM 3912 Page Printer (HP Mode) (New V3R1)
*IBM3916HP	IBM 3916 Page Printer (HP Mode)
*IBM39302	IBM 3930-02S Page Printer
	IBM 3930-02D Page Printer
*IBM39303	IBM 3930-03S Page Printer
	IBM 3930-03D Page Printer
*IBM4019	IBM 4019 LaserPrinter
	IBM 4019E LaserPrinter E
*IBM4019HP	IBM 4019 LaserPrinter (HP Mode)
	IBM 4019E LaserPrinter E (HP Mode)
*IBM4029	IBM 4029-010 LaserPrinter 5E
	IBM 4029-020 LaserPrinter 6
	IBM 4029-030 LaserPrinter 10
	IBM 4029-040 LaserPrinter 10L
*IBM4029HP	IBM 4029-010 LaserPrinter 5E (HP Mode)
	IBM 4029-020 LaserPrinter 6 (HP Mode)
	IBM 4029-030 LaserPrinter 10 (HP Mode)
	IBM 4029-040 LaserPrinter 10L (HP Mode)
*IBM4037	IBM 4037 5E Printer
*IBM4039HP	IBM 4039 LaserPrinter 10D (HP Mode)
	IBM 4039 LaserPrinter 10D Plus (HP Mode)
	IBM 4039 LaserPrinter 10R (HP Mode)
	IBM 4039 LaserPrinter 10R Plus (HP Mode)
	IBM 4039 LaserPrinter 12R (HP Mode)
	IBM 4039 LaserPrinter 12R Plus (HP Mode)
	IBM 4039 LaserPrinter 12L (HP Mode)
	IBM 4039 LaserPrinter 12L Plus (HP Mode)
	IBM 4039 LaserPrinter 16L (HP Mode)
	IBM 4039 LaserPrinter 16L Plus (HP Mode)
*IBM4070	IBM 4070 IJ
*IBM4070EP	IBM 4070 IJ (Epson Mode)
*IBM4072	IBM 4072 ExecJet*
*IBM4076	IBM 4076 ExecJet II Printer (HP Mode)
*IBM42011	IBM 4201-1 Proprinter*
*IBM42012	IBM 4201-2 Proprinter II
*IBM42013	IBM 4201-3 Proprinter III
*IBM42021	IBM 4202-1 Proprinter XL
*IBM42022	IBM 4202-2 Proprinter II XL
*IBM42023	IBM 4202-3 Proprinter III XL
*IBM42071	IBM 4207-1 Proprinter X24
*IBM42072	IBM 4207-2 Proprinter X24E
*IBM42081	IBM 4208-1 Proprinter XL24
*IBM42082	IBM 4208-2 Proprinter XL24E
*IBM4212	IBM 4212 Proprinter 24P
*IBM4216	IBM 4216-10 Personal Pageprinter
*IBM4226	IBM 4226-302 Printer
*IBM4230	IBM 4230-4S3 Printer (IBM Mode) (New V3R1)
	IBM 4230-4I3 Printer (IBM Mode)
*IBM4232	IBM 4232-302 Printer (IBM Mode)
*IBM47121	IBM 4712-1 Transaction Printer
*IBM47122	IBM 4712-2 Transaction Printer

*IBM47221	IBM 4722-1 Document Printer
*IBM47222	IBM 4722-2 Document Printer
*IBM4770	IBM 4770 InkJet Transaction Printer (New V3R1)
*IBM5152	IBM 5152 Graphics printer
*IBM5201	IBM 5201-2 Quietwriter*
*IBM5202	IBM 5202-1 Quietwriter III
*IBM5204	IBM 5204-1 Quickwriter*
*IBM5216	IBM 5216 Wheelprinter
*IBM6408	IBM 6408-A00 Printer (IBM Mode)
	IBM 6408-CTA Printer (IBM Mode)
*IBM6408EP	IBM 6408-A00 Printer (Epson mode) (New V3R1)
	IBM 6408-CTA Printer (Epson Mode) (New V3R1)
*IBM6412	IBM 6412-A00 Printer (IBM Mode) (New V3R1)
	IBM 6412-CTA Printer (IBM Mode) (New V3R1)
*IBM6412EP	IBM 6412-A00 Printer (Epson Mode) (New V3R1)
	IBM 6412-CTA Printer (Epson Mode) (New V3R1)

OS/400 Version 3.0 Release 1.0 also includes manufacturer type and model (MFRTYPMDL) objects for the following OEM ASCII printers:

MFRTYPMDL	**Printer Description**
*CPQPM15	Compaq** PageMark 15 (HP Mode)
*CPQPM20	Compaq PageMark 20 (HP Mode)
*HPII	HP LaserJet Series II**
*HPIID	HP LaserJet** IID
*HPIIP	HP LaserJet IIP
*HPIII	HP LaserJet III
*HPIIID	HP LaserJet IIID
*HPIIIP	HP LaserJet IIIP
*HPIIISI	HP LaserJet IIISi
*HP4	HP LaserJet 4
*HP310	HP DeskJet 310 (Black print only) (New V3R1)
*HP500	HP DeskJet 500
*HP520	HP DeskJet 520 (New V3R1)
*HP550C	HP DeskJet 550C
*HP560C	HP DeskJet 560C (New V3R1)
*HPPAINT	HP PaintJet**
	HP PaintJet XL
	HP PaintJet XL300
*EPAP2250	Epson ActionPrinter 2250
*EPAP3250	Epson ActionPrinter 3250
*EPAP5000	Epson ActionPrinter 5000
*EPAP5500	Epson ActionPrinter 5500
*EPDFX5000	Epson DFX-5000
*EPDFX8000	Epson DFX-8000
*EPFX850	Epson FX-850
*EPFX870	Epson FX-870
*EPFX1170	Epson FX-1170
*EPLQ510	Epson LQ-510
*EPLQ570	Epson LQ-570
*EPLQ860	Epson LQ-860
*EPLQ870	Epson LQ-870
*EPLQ1070	Epson LQ-1070
*EPLQ1170	Epson LQ-1170
*EPLQ2550	Epson LQ-2550

*EPLX810	Epson LX-810
*EPSQ870	Epson SQ-870
*EPSQ1170	Epson SQ-1170
*EPEPL7000	Epson EPL-7000
*EPEPL8000	Epson EPL-8000
*NECP2	NEC** P2 Pinwriter
*NECP2200	NEC P2200 Pinwriter
*NECP2200XE	NEC P2200 XE Pinwriter
*NECP5200	NEC P5200 Pinwriter
*NECP5300	NEC P5300 Pinwriter
*NECP6200	NEC P6200 Pinwriter
*NECP6300	NEC P6300 Pinwriter
*OKI184IBM	Okidata** Microline 184 Turbo (IBM Mode)
*OKI320IBM	Okidata Microline 320 (IBM Mode)
*OKI321IBM	Okidata Microline 321 (IBM Mode)
*OKI390IBM	Okidata Microline 390 Plus (IBM Mode)
*OKI391IBM	Okidata Microline 391 Plus (IBM Mode)
*OKI393IBM	Okidata Microline 393 Plus (IBM Mode)
*OKI590IBM	Okidata Microline 590 (IBM Mode)
*OKI591IBM	Okidata Microline 591 (IBM Mode)
*OKI400	Okidata OL400 LED Page Printer
*OKI800	Okidata OL800 LED Page Printer
*OKI810	Okidata OL810 LED Page Printer
*OKI820	Okidata OL820 LED Page Printer
*OKI3410	Okidata Pacemark 3410
*PAN1123EP	Panasonic** KX-P1123 (Epson Mode)
*PAN1124EP	Panasonic KX-P1124 (Epson Mode)
*PAN1124IEP	Panasonic KX-P1124i (Epson Mode)
*PAN1180EP	Panasonic KX-P1180 (Epson Mode)
*PAN1180IEP	Panasonic KX-P1180i (Epson Mode)
*PAN1191EP	Panasonic KX-P1191 (Epson Mode)
*PAN1624EP	Panasonic KX-P1624 (Epson Mode)
*PAN1654EP	Panasonic KX-P1654 (Epson Mode)
*PAN1695EP	Panasonic KX-P1695 (Epson Mode)
*PAN2123EP	Panasonic KX-P2123 (Epson Mode)
*PAN2124EP	Panasonic KX-P2124 (Epson Mode)
*PAN2180EP	Panasonic KX-P2180 (Epson Mode)
*PAN2624EP	Panasonic KX-P2624 (Epson Mode)
*PAN4410HP	Panasonic KX-P4410 (HP Mode)
*PAN4420HP	Panasonic KX-P4420 (HP Mode)
*PAN4430HP	Panasonic KX-P4430 (HP Mode)
*PAN4450IHP	Panasonic KX-P4450i (HP Mode)
*PAN4451HP	Panasonic KX-P4451 (HP Mode)
*XRX4215MRP	Xerox 4215/MRP (HP Mode) (New V3R1)
*XRX4219MRP	Xerox 4219/MRP (HP Mode) (New V3R1)
*XRX4220MRP	Xerox 4220/MRP (HP Mode) (New V3R1)
*XRX4235	Xerox 4235 Laser Printing (HP Mode) (New V3R1)
*XRX4700II	Xerox 4700 II Color Document printer (HP Mode) (New V3R1)

6.3 Customizing ASCII Printers that Use the Host Print Transform

If you do not find your printer in the list of the MFRTYPMDLs, or if you need additional print functions, you can specify a WSCST object instead of a manufacturer type and model. You can create your own WSCST object or modify an existing WSCST object.

Using the workstation customization functions you can:

- Customize the functional characteristics of an ASCII printer.
- Customize the functional characteristics and specify all necessary parameters required to support a normally unsupported ASCII printer.

The host print transform function uses the workstation customization transform table to transform the printer data stream sent by the AS/400 to an attached ASCII printer. The transform table includes the following functions:

- Printer control functions (bell, carriage return, initialize printer, reset printer, set duplex printing, etc.).
- Printer data stream (Epson, HP-PCL4, HP-PCL5, IBM-PPDS, NEC, etc.).
- Print media size (envelope size, paper size, page size for transform, etc.).
- Highlighting (start/end bold printing, start/end underscore)
- Horizontal spacing and relative movement (backspace, CPI, CPI in COR mode, direction, start/end proportional space, etc.).
- Vertical spacing and relative movement (form feed, half line feed, line feed, direction, vertical line spacing, etc.).
- Indexing (start/end subscript)
- Color selection (color)
- No-print border (top, left, right, bottom, portrait, landscape, etc.).
- Page length (set page length in inches, set page length in lines, etc.).
- Paper drawer selection (drawer 1, drawer 2, envelope, etc.).
- Paper orientation (portrait, landscape, RTT180, RTT270, etc.).
- Print quality (draft, letter, text, etc.).
- Fonts (font groups, individual font, point size, etc.).
- Code page support (EBCDIC-to-ASCII mapping table, EBCDIC code page, ASCII code page, etc.).

Use the following steps to customize the functional characteristics of an ASCII printer:

1. Prepare for customization.
2. Retrieve the workstation customization source.
3. Change the workstation customization source.
4. Create a customizing object that contains the changed printer attributes.
5. Change the printer device description to specify the customizing object.

6.3.1 Preparing for Customization

Before you can begin customizing an ASCII printer, you must have information on the functions the ASCII printer supports. You can only add or change printing functions that a printer supports. You also need the hexadecimal values for these functions. Often, the technical reference manual for the printer provides this information.

Before you begin printer customization, complete the following steps to set up both supported and unsupported printers:

- Set up all the necessary hardware to connect the printer to the AS/400 system.
- Set up any programmable features provided by the printer such as switch settings, or selecting which printer to emulate.
- Create the necessary controller and device descriptions, if they do not already exist.

After you set up and turn on the ASCII printer, use one of your usual applications to print a short test document. This will show you how the output look and will help you to determine what must be customized. This is the starting point for workstation customization.

Customizing an ASCII printer may involve a trial-and-error process. The amount of time required to customize a printer depends on: the type of printer; whether or not the printer is already printing; and the completeness of the manual for the printer. You should plan anywhere from one to five days to complete a successful ASCII printer customization.

To customize an unsupported ASCII printer, ask the following questions:

- Can the printer emulate a supported ASCII printer?

  If so, try this other emulation mode. For example, IBM 4029s support PPDS and PCL. It could provide the support you need.
- What printer functions or characteristics and national characters do I want this printer to support?

  Write these down so that you can answer the next question.
- Does the printer itself support the functions I need?

  Check the printer manual to determine this. If the printer cannot support the functions you need, you cannot customize the WSCST to provide these functions.

6.3.2 Retrieving the Workstation Customizing Source

When you decide to customize an ASCII printer, you need to retrieve the correct source for your printer. Use the Retrieve Work Station Customizing Object Source (RTVWSCST) command to retrieve the source.

```
                        Retrieve WSCST source (RTVWSCST)
Type choices, press Enter.
Device type  . . . . . . . . . . > *TRANSFORM    *TRANSFORM, 3101, 3151...
Manufacturer type and model  . . > *IBM4039HP
Source member  . . . . . . . . . > SRC4039HP     Name
Source file  . . . . . . . . . . > QTXTSRC       Name
  Library  . . . . . . . . . . . >   ROCHLIB     Name, *CURLIB, *LIBL
Text 'description' . . . . . . . > 'IBM4039 WSCST source'

                                                                      Bottom
F3=Exit   F4=Prompt   F5=Refresh   F12=Cancel   F13=How to use this display
F24=More keys
```

Figure 76. Retrieve WSCST Source Screen

1. Type RTVWSCST, and press the **Enter** key.
2. Specify a device type of *TRANSFORM, and press the **Enter** key.
3. Specify the printer Manufacturer, Type, and Model (MFRTYPMDL parameter). To see a complete list of the ASCII printers supported, press F4 (Prompt) on the manufacturer type and model field.

   Note: If you are customizing an ASCII printer that is not listed, you can select an existing manufacturer type and model with the same data stream (such as PPDS, PCL4, PCL5) as your printer and similar printer functions. The technical reference manual of your printer may give you the printer emulation supported (such as HPIII, HP4, or Epson).
4. Specify a name for the source file member to be created for the transform table you want to retrieve. This should be a name you can easily remember. If the file does not exist it will be created for you.
5. Specify a library and source file name in which to store the source file member you specified in the previous step. The library you specify must exist.
6. Specify a text description for the source file member if it does not already have one. This description should be unique.

6.3.3 Editing the WSCST Source Object

The printer function tags change the ASCII control sequence for an individual printer function. You can change, add, or delete the printer function tags by editing the source member file for the retrieved source using the Source Entry Utility (SEU). SEU is a function of the AS/400 Application Development Tools licensed program that is used to create and change source members.

Use the following procedure to change the source file member you created previously with the RTVWSCST command:

1. Type STRSEU, and press F4 (Prompt)

   You will receive the Start Source Entry Utility screen:

```
                        Start Source Entry Utility (STRSEU)
 Type choices, press Enter.
 Source file  . . . . . . . . . . > QTXTSRC       Name, *PRV
   Library  . . . . . . . . . . . >   ROCHLIB     Name, *LIBL, *CURLIB, *PRV
 Source member  . . . . . . . . .   *PRV          Name, *PRV, *SELECT
 Source type  . . . . . . . . . .   *SAME         Name, *SAME, BAS, BASP...
 Option . . . . . . . . . . . . .   *BLANK        *BLANK, ' ', 2, 5, 6
 Text 'description' . . . . . . .   *BLANK

                                                                      Bottom
 F3=Exit   F4=Prompt   F5=Refresh   F12=Cancel   F13=How to use this display
 F24=More keys
```

Figure 77. Start Source Entry Utility Screen

2. On the Start Source Entry Utility screen, enter the source file name and the library name (in the example QTXTSRC and ROCHLIB), then press the **Enter** key.

   You will receive the following screen:

```
                           Work with Members Using SEU
Source file . . . . . .   QTXTSRC                Library . . . . .  ROCHLIB
Position to . . . . . . . . . . . . . . . . . . . . . . . . . . . .
New member  . . . . . . . . . . . . . . . . . . . . . . . . . . . .
  Type for new member . . . . . . . . . . . . . . . . . . . . . .  TXT
  Text  . . . . . . . . .
Type options, press Enter.
   2=Edit     4=Delete       5=Browse         6=Print
Opt Member       Type        Text
    SRC4029                  IBM4029 WSCST source
 2  SRC4039HP                IBM4039 WSCST source



                                                                      Bottom
 F3=Exit          F5=Refresh         F12=Cancel          F14=Display date
 F15=Sort by date                    F17=Subset
                                        (C) COPYRIGHT IBM CORP. 1981, 1994.
```

Figure 78. Work with Members Using SEU Screen

3. Type a 2 (Edit) in the option column next to the file member containing the customizing source you want to change, and press the **Enter** key.

   The following display appears:

```
 Columns . . . :    1  80                                        Edit
 SEU==>
 FMT **  ...+... 1 ...+... 2 ...+... 3 ...+... 4 ...+... 5 ...+... 6 ...+... 7 .
        *************** Beginning of data ***************************************
0000.01 :WSCST DEVCLASS=TRANSFORM.
0000.02
0000.03     :TRNSFRMTBL.
0000.04     :PRTDTASTRM
0000.05       DATASTREAM=HPPCL5.
0000.06     :NOPRTBDR
0000.07       OPTION=TOP
0000.08       ORIENT=PORTRAIT
0000.09       DATA =  720.
0000.10     :NOPRTBDR
0000.11       OPTION=LEFT
0000.12       ORIENT=PORTRAIT
0000.13       DATA =  360.
0000.14     :NOPRTBDR
0000.15       OPTION=RIGHT
0000.16       ORIENT=PORTRAIT
0000.17       DATA =  360.
0000.18     :NOPRTBDR
0000.19       OPTION=BOTTOM
 F3=Exit   F4=Prompt   F5=Refresh   F9=Retrieve   F10=Cursor
 F16=Repeat find       F17=Repeat change          F24=More keys
```

Figure 79. SEU Edit Screen

4. Use the tag language to change the source member.

The TRNSFRMTBL (Transform table) tag defines a transform table for an ASCII printer that uses the host print transform function. In general, when you customize a transform table, the host print transform function uses only tags defined in your customizing object. You can delete function tags from the retrieved source when creating your customizing object. The host print transform function then assumes a null value for the ASCII control sequence for that function.

The absence of a specific printer function tag after the TRNSFRMTBL tag implies that particular printer function is not mapped and cannot be used. If the function is present on the printer, you can add the tag for the function. For example, if you add a duplex feature to your printer, you can add the DUPXPRT tag (Set duplex printing) to the table.

Note: The last element within a tag entry must be followed by a period.

6.3.4 Understanding the Transform Table

The host print transform function uses a transform table to transform the printer data stream sent by the AS/400 system to an attached ASCII printer. The following table is the retrieved source listing for an *IBM4039HP manufacturer type and model object. On the left side are the sequence number and the tags. On the right side is an explanation of the tags.

Note: In the source you retrieve, the comments on the right will not be present as in this example.

Following the source table listing, this topic also contains detailed tag information referenced based on the sequence numbers.

The transform table and the detailed information contain PCL5 language code. If you are not familiar with PCL5 language, you can first read 6.5, “PCL5 Language Overview” on page 171. Refer to your ASCII printer technical reference manual for the ASCII command codes supported.

```
 1 :WSCST DEVCLASS=TRANSFORM.            WSCST used by Host Print Transform
 2
 3     :TRNSFRMTBL.                      Transform table
 4     :PRTDTASTRM                       Printer data stream
 5       DATASTREAM=HPPCL5.                 Data stream type: HPPCL5
 6     :NOPRTBDR                         No-print border
 7       OPTION=TOP                        Border type: Top
 8       ORIENT=PORTRAIT                   Orientation: Portrait
 9       DATA =  720.                      No-print size in 1440ths of an inch
10     :NOPRTBDR                         No-print border
11       OPTION=LEFT                       Border type: Left
12       ORIENT=PORTRAIT                   Orientation: Portrait
13       DATA =  360.                      No-print size in 1440ths of an inch
14     :NOPRTBDR                         No-print border
15       OPTION=RIGHT                      Border type: Right
16       ORIENT=PORTRAIT                   Orientation: Portrait
17       DATA =  360.                      No-print size in 1440ths of an inch
18     :NOPRTBDR                         No-print border
19       OPTION=BOTTOM                     Border type: Bottom
20       ORIENT=PORTRAIT                   Orientation: Portrait
21       DATA =  720.                      No-print size in 1440ths of an inch
22     :NOPRTBDR                         No-print border
23       OPTION=TOP                        Border type: Top
24       ORIENT=LANDSCAPE                  Orientation: Landscape
25       DATA =  720.                      No-print size in 1440ths of an inch
26     :NOPRTBDR                         No-print border
27       OPTION=LEFT                       Border type: Left
28       ORIENT=LANDSCAPE                  Orientation: Landscape
29       DATA =  288.                      No-print size in 1440ths of an inch
30     :NOPRTBDR                         No-print border
31       OPTION=RIGHT                      Border type: Right
32       ORIENT=LANDSCAPE                  Orientation: Landscape
33       DATA =  288.                      No-print size in 1440ths of an inch
34     :NOPRTBDR                         No-print border
35       OPTION=BOTTOM                     Border type: Bottom
36       ORIENT=LANDSCAPE                  Orientation: Landscape
37       DATA =  720.                      No-print size in 1440ths of an inch
38     :INITPRT                          Initialize printer
39       DATA ='1B45'X.                    * PCL5 cmd: Reset printer
40     :RESETPRT                         Reset Printer
41       DATA ='1B45'X.                    * PCL5 cmd: Reset printer
42     :BELL                             Bell
43       DATA ='07'X.                      * PCL5 control code
44     :SPACE                            Space
45       DATA ='20'X.                      * PCL5 control code
46     :BSP                              Backspace
47       DATA ='08'X.                      * PCL5 control code
48     :CARRTN                           Carriage return
49       DATA ='0D'X.                      * PCL5 control code
50     :FORMFEED                         Form feed
51       DATA ='0C'X.                      * PCL5 control code
52     :LINEFEED                         Line feed
53       DATA ='0A'X.                      * PCL5 control code
54     :VERRMOV                          Vertical relative movement
```

```
55        DIRECTION=UP                      Direction: Upward
56        VAROFFSET=    4                   Offset to variable in PCL5 cmd: 4
57        VARLEN=    4                      Length of the variable: 4
58        VARTYPE=CHRDEC                    Variable type: Decimal format
59        CNVNUM=    1                      Conversion ratio numerator: 1
60        CNVDEN=  720                      Conversion ratio denominator: 720
61        DATA ='1B26612D0000000056'X.      * PCL5 cmd: Vertical cursor position
62      :VERRMOV                          Vertical relative movement
63        DIRECTION=DOWN                    Direction: Downward
64        VAROFFSET=    4                   Offset to variable in PCL5 cmd: 4
65        VARLEN=    4                      Variable length: 4
66        VARTYPE=CHRDEC                    Variable type: Decimal format
67        CNVNUM=    1                      Conversion ratio numerator: 1
68        CNVDEN=  720                      Conversion ratio denominator: 720
69        DATA ='1B26612B0000000056'X.      * PCL5 cmd: Vertical cursor position
70      :HORRMOV                          Horizontal movement
71        DIRECTION=FWD                     Direction: Forward
72        VAROFFSET=    4                   Offset to variable in PCL5 cmd: 4
73        VARLEN=    3                      Variable length: 3
74        VARTYPE=CHRDEC                    Variable type: Decimal format
75        CNVNUM=    1                      Conversion ratio numerator: 1
76        CNVDEN=  720                      Conversion ratio denominator: 720
77        DATA ='1B26612B00000048'X.        * PCL5 cmd: Horizontal cursor position
78      :HORRMOV                          Horizontal movement
79        DIRECTION=BCK                     Direction: Backward
80        VAROFFSET=    4                   Offset to variable in PCL5 cmd: 4
81        VARLEN=    3                      Variable length: 3
82        VARTYPE=CHRDEC                    Variable type: Decimal format
83        CNVNUM=    1                      Conversion ratio numerator: 1
84        CNVDEN=  720                      Conversion ratio denominator: 720
85        DATA ='1B26612D00000048'X.        * PCL5 cmd: Horizontal cursor position
86      :STRBOLD                          Start bold printing
87        DATA ='1B28733342'X.              * PCL5 cmd: Select stroke weight
88      :ENDBOLD                          End bold printing
89        DATA ='1B28733042'X.              * PCL5 cmd: Select stroke weight
90      :STRSUBS                          Start subscript function
91        DATA ='1B26612B2E3352'X.          * PCL5 cmd: Vertical cursor position
92      :ENDSUBS                          End subscript function
93        DATA ='1B26612D2E3352'X.          * PCL5 cmd: Vertical cursor position
94      :STRSUPS                          Start superscript function
95        DATA ='1B26612D2E3352'X.          * PCL5 cmd: Vertical cursor position
96      :ENDSUPS                          End superscript function
97        DATA ='1B26612B2E3352'X.          * PCL5 cmd: Vertical cursor position
98      :STRUS                            Start underscore function
99        DATA ='1B26643044'X.              * PCL5 cmd: Select underscore type
100     :ENDUS                            End underscore function
101       DATA ='1B266440'X.                * PCL5 cmd: Disable underscore
102     :VARLSPC                          Variable line spacing
103       VAROFFSET=    3                   Offset to variable in PCL5 cmd: 3
104       VARLEN=    3                      Variable length: 3
105       VARTYPE=CHRDEC                    Variable type: Decimal format
106       CNVNUM=    1                      Conversion ratio numerator: 1
107       CNVDEN=   48                      Conversion ratio denominator: 48
108       DATA ='1B266C00000043'X.          * PCL5 cmd: Set vertical motion index
109     :CPICOR                           CPI in COR mode
110       CPI=10                            CPI before reduction: 10
111       ASCIIFNT=  255                    ASCII font ID to be used: 255
112       FNTWTH=   84                      Font width: 84
113       FNTATR=    1                      Font attribute: 1 (fixed pitch)
```

```
114       DATA ='' X.                          ASCIIFNT value used to select COR font
115     :CPICOR                              CPI in COR mode
116       CPI=12                               CPI before reduction: 12
117       ASCIIFNT=  255                       ASCII font ID to be used: 255
118       FNTWTH=   84                         Font width: 84
119       FNTATR=    1                         Font attribute: 1 (fixed pitch)
120       DATA ='' X.                          ASCIIFNT value used to select COR font
121     :CPICOR                              CPI in COR mode
122       CPI=15                               CPI before reduction: 15
123       ASCIIFNT=  255                       ASCII font ID to be used: 255
124       FNTWTH=   84                         Font width: 84
125       FNTATR=    1                         Font attribute: 1 (fixed pitch)
126       DATA ='' X.                          ASCIIFNT value used to select COR font
127     :PRTORIENT                           Paper orientation
128       ORIENT=PORTRAIT                      Orientation: Portrait (0)
129       DATA ='1B266C304F' X.                * PCL5 cmd: Set paper orientation
130     :PRTORIENT                           Paper orientation
131       ORIENT=LANDSCAPE                     Orientation: Landscape (90)
132       DATA ='1B266C334F' X.                * PCL5 cmd: Set paper orientation
133     :PRTORIENT                           Paper orientation
134       ORIENT=RTT180                        Orientation: Reverse portrait (180)
135       DATA ='1B266C324F' X.                * PCL5 cmd: Set paper orientation
136     :PRTORIENT                           Paper orientation
137       ORIENT=RTT270                        Orientation: Reverse landscape (270)
138       DATA ='1B266C314F' X.                * PCL5 cmd: Set paper orientation
139     :SMPXPRT                             Set simplex printing
140       DATA ='1B266C3053' X.                * PCL5 cmd: Set duplex/binding values
141     :DUPXPRT                             Set duplex printing
142       DATA ='1B266C3153' X.                * PCL5 cmd: Set duplex/binding values
143     :TUMDUPXPRT                          Set tumble duplex printing
144       DATA ='1B266C3253' X.                * PCL5 cmd: Set duplex/binding values
145     :DWRSLT                              Paper drawer selection
146       DRAWER=PAPER                         Drawer selection: Manual feed
147       DATA ='1B266C3248' X.                * PCL5 cmd: Select paper feed
148     :DWRSLT                              Paper drawer selection
149       DRAWER=ENVELOPE                      Drawer selection: Envelope
150       DATA ='1B266C3368314F' X.            * PCL5 cmd: Select paper feed
151     :DWRSLT                              Paper drawer selection
152       DRAWER=DRAWER1                       Drawer selection: Drawer 1
153       DATA ='1B266C3148' X.                * PCL5 cmd: Select paper feed
154     :DWRSLT                              Paper drawer selection
155       DRAWER=DRAWER2                       Drawer selection: Drawer 2
156       DATA ='1B266C3448' X.                * PCL5 cmd: Select paper feed
157     :PAGSIZXFM.                          Set page size for transform
158     :PAGSIZE                             Page size entry for A5 paper
159       PAGWTH= 8352                         Page width in 1440ths of an inch
160       PAGLEN=11952                         Page length in 1440ths of an inch
161       DATA ='1B266C313341' X.              * PCL5 cmd: Set paper size
162     :PAGSIZE                             Page size entry for B5 paper
163       PAGWTH=10368                         Page width in 1440ths of an inch
164       PAGLEN=14544                         Page length in 1440ths of an inch
165       DATA ='1B266C313241' X.              * PCL5 cmd: Set paper size
166     :PAGSIZE                             Page size entry for Executive
167       PAGWTH=10440                         Page width in 1440ths of an inch
168       PAGLEN=15120                         Page length in 1440ths of an inch
169       DATA ='1B266C303141' X.              * PCL5 cmd: Set paper size
170     :PAGSIZE                             Page size entry for Letter
171       PAGWTH=12240                         Page width in 1440ths of an inch
172       PAGLEN=15840                         Page length in 1440ths of an inch
```

```
173       DATA ='1B266C303241'X.            * PCL5 cmd: Set paper size
174     :PAGSIZE                          Page size entry for A4 paper
175       PAGWTH=11952                      Page width in 1440ths of an inch
176       PAGLEN=16848                      Page length in 1440ths of an inch
177       DATA ='1B266C323641'X.            * PCL5 cmd: Set paper size
178     :PAGSIZE                          Page size entry for Legal
179       PAGWTH=12240                      Page width in 1440ths of an inch
180       PAGLEN=20160                      Page length in 1440ths of an inch
181       DATA ='1B266C303341'X.            * PCL5 cmd: Set paper size
182     :EPAGSIZXFM.                      End set page size for transform
183     :ENVSIZXFM.                       Set envelope size for transform
184     :ENVSIZE                          Envelope size entry for Monarch 7 3/4
185       ENVWTH=10800                      Envelope width in 1440ths of an inch
186       ENVLEN= 5580                      Envelope length in 1440ths of an inch
187       DATA ='1B266C383041'X.            * PCL5 cmd: Set paper size
188     :ENVSIZE                          Envelope size entry for Commercial 9
189       ENVWTH=12780                      Envelope width in 1440ths of an inch
190       ENVLEN= 5580                      Envelope length in 1440ths of an inch
191       DATA ='1B266C383941'X.            * PCL5 cmd: Set paper size
192     :ENVSIZE                          Envelope size entry for Commercial 10
193       ENVWTH=13680                      Envelope width in 1440ths of an inch
194       ENVLEN= 5940                      Envelope length in 1440ths of an inch
195       DATA ='1B266C383141'X.            * PCL5 cmd: Set paper size
196     :ENVSIZE                          Envelope size entry for DL
197       ENVWTH=12528                      Envelope width in 1440ths of an inch
198       ENVLEN= 6192                      Envelope length in 1440ths of an inch
199       DATA ='1B266C393041'X.            * PCL5 Cmd: Set paper size
200     :ENVSIZE                          Envelope size entry for C5 envelope
201       ENVWTH=12960                      Envelope width in 1440ths of an inch
202       ENVLEN= 9216                      Envelope length in 1440ths of an inch
203       DATA ='1B266C393141'X.            * PCL5 cmd: Set paper size
204     :ENVSIZE                          Envelope size entry for B5 envelope
205       ENVWTH=14112                      Envelope width in 1440ths of an inch
206       ENVLEN= 9936                      Envelope length in 1440ths of an inch
207       DATA ='1B266C393941'X.            * PCL5 cmd: Set paper size
208     :EENVSIZXFM.                      End envelope size for transform
209     :FNTGRP.                          Begin font group definition
210     :FNTGRPE                          Font group entry
211       MINFID=  154                      Smallest font ID in the group: 154
212       MAXFID=  200                      Largest font ID in the group: 200
213       FNTSTR='1B28733170313276307330623431303154'X  * PCL5 cmd: Font selection
214       FNTEND=''X                        * PCL5 cmd: End font request (optional)
215       FNTWTH=                           Individual character widths
216      /* -0-1-2-3-4-5-6-7-8-9-A-B-C-D-E-F */
217        '22ADAEA78FBEA777EFABEF7F696869AA'X      /* 00- */
218        '62624A48635892514E4EADAD93AD6B6B'X      /* 01- */
219        '48526E7878D36652525278D352525252'X      /* 02- */
220        '787878787878787878785252F0D3F06A'X      /* 03- */
221        'D3AD95A3629590AD625256A895D8B1AD'X      /* 04- */
222        '8BAD9E8295B2ADE2ADAD9A5252527878'X      /* 05- */
223        '526A786A786A52787843437843BB7878'X      /* 06- */
224        '7878565B437878AD78786A6A786AF0F0'X      /* 07- */
225        '927361626262625C616161424245A5A5'X      /* 08- */
226        '9293CE6A6A6A7373709DA6617074C592'X      /* 09- */
227        '48ADAD9595955252787878787 8B1B178'X     /* 0A- */
228        '78AD7878A36AB178526A787878787878'X      /* 0B- */
229        '6A6A78786A6A78786A6A78786A6A7878'X      /* 0C- */
230        'AD43ADD36A43789EAD43ADB1954378AD'X      /* 0D- */
231        'ADAD6AB1785252ADADAD78825BB1AD78'X      /* 0E- */
```

```
232        '8B78958678D3D3D3D3787860AD60D348'X.     /* 0F- */
233     :EFNTGRP.                          End font group definition
234     :INDFNT.                           Begin individual font definition
235     :INDFNTE                           Individual font entry
236       FID=  186                          Font ID: 186
237       POINTSIZE= 0                       Font point size: 0 (not required)
238       FNTSTR='1B28733170313276307330623431303154'X  * PCL5 cmd: Font selection
239       FNTEND=''X                         * PCL5 cmd: End font request (optional)
240       FNTWTH=                            Individual character widths
241      /* -0-1-2-3-4-5-6-7-8-9-A-B-C-D-E-F */
242        '22ADAEA78FBEA777EFABEF7F696869AA'X      /* 00- */
243        '62624A48635892514E4EADAD93AD6B6B'X      /* 01- */
244        '48526E7878D36652525278D352525252'X      /* 02- */
245        '787878787878787878785252F0D3F06A'X      /* 03- */
246        'D3AD95A3629590AD625256A895D8B1AD'X      /* 04- */
247        '8BAD9E8295B2ADE2ADAD9A5252527878'X      /* 05- */
248        '526A786A786A52787843437843BB7878'X      /* 06- */
249        '7878565B437878AD78786A6A786AF0F0'X      /* 07- */
250        '927361626262625C616161424245A5A5'X      /* 08- */
251        '9293CE6A6A6A7373709DA6617074C592'X      /* 09- */
252        '48ADAD9595955252787878787878B1B178'X    /* 0A- */
253        '78AD7878A36AB178526A787878787878'X      /* 0B- */
254        '6A6A78786A6A78786A6A78786A6A7878'X      /* 0C- */
255        'AD43ADD36A43789EAD43ADB1954378AD'X      /* 0D- */
256        'ADAD6AB1785252ADADAD78825BB1AD78'X      /* 0E- */
257        '8B78958678D3D3D3D3787860AD60D348'X.     /* 0F- */
258     :INDFNTE                           Individual font entry
259       FID=  187                          Font ID: 187
260       POINTSIZE= 0                       Font point size: 0 (not required)
261       FNTSTR='1B28733170313276307333623431303154'X  * PCL5 cmd: Font selection
262       FNTEND=''X                         * PCL5 cmd: End font request (optional)
263       FNTWTH=                            Individual character widths
264      /* -0-1-2-3-4-5-6-7-8-9-A-B-C-D-E-F */
265        '22ADAEA78FBEA777EFABEF7F696869AA'X      /* 00- */
266        '62625162635A92515656ADAD93AD6B6B'X      /* 01- */
267        '482947736BB2AC1C3E425D932C422942'X      /* 02- */
268        '6D5A706C6F6F6D706C6D292C8F938F5C'X      /* 03- */
269        'C8A5939AA59993AFB55474B397DDA9AC'X      /* 04- */
270        '93ACA97492ACA8E9A5A6933D423D4578'X      /* 05- */
271        '38717A647A635A6D7E3B4F7F3BC07E6D'X      /* 06- */
272        '7A7962504B7E71A8727061590D5956AC'X      /* 07- */
273        '9A7E6371717171646363634F4547A5A5'X      /* 08- */
274        '99A2EF6D6D6D7E7E70ACAC60787FE195'X      /* 09- */
275        '71466D7E7EA94F4E5D9393B3AD2A5859'X      /* 0A- */
276        'C7EFEF107F7F96967F963C9696967F7F'X      /* 0B- */
277        '7FEFEF7FEFEF7F969696EFEF96EFEFEF'X      /* 0C- */
278        'EFEFEF967F7F96EFEF7F7FEFEF7878EF'X      /* 0D- */
279        '82787F81907079609193815AAD804994'X      /* 0E- */
280        '959395953E3F9395462921C469475722'X.     /* 0F- */
281     :INDFNTE                           Individual font entry
282       FID=  188                          Font ID: 188
283       POINTSIZE= 0                       Font point size: (not required)
284       FNTSTR='1B28733170313276317330623431303154'X  * PCL5 cmd: Font selection
285       FNTEND=''X                         * PCL5 cmd: End font request (optional)
286       FNTWTH=                            Individual character widths
287      /* -0-1-2-3-4-5-6-7-8-9-A-B-C-D-E-F */
288        '22ADAEA78FBEA777EFABEF7F696869AA'X      /* 00- */
289        '62624A64635892514E4EADAD93AD6B6B'X      /* 01- */
290        '483B417272969D1D45455D93243E1C5C'X      /* 02- */
```

```
291        '735B6D6F76757A777373323B8F938F52'X      /* 03- */
292        'C2939399AF9E9DA5BF647CB292DAB89D'X      /* 04- */
293        '969D957991A392D9AB91976B1E694578'X      /* 05- */
294        '33706F617E5E9273713663703CA9706D'X      /* 06- */
295        '90715B56416B639A746F60620D624CAC'X      /* 07- */
296        '996B6170707070645E635E4E4942A295'X      /* 08- */
297        '9E96E46D6D6D6B6B769DA3619284D992'X      /* 09- */
298        '704C6D6B73B85956519393A39C396061'X      /* 0A- */
299        'C7EFEF107F7F96967F963C9696967F7F'X      /* 0B- */
300        '7FEFEF7FEFEF7F969696EFEF96EFEFEF'X      /* 0C- */
301        'EFEFEF967F7F96EFEF7F7FEFEF7878EF'X      /* 0D- */
302        '829F7E82826F78639093815BAD7F4A94'X      /* 0E- */
303        '959395953A3A9395451C18C363465722'X.     /* 0F- */
304     :INDFNTE                          Individual font entry
305       FID=  189                         Font ID: 189
306       POINTSIZE= 0                      Font point size: 0 (not required)
307       FNTSTR='1B28733170313276317333623431303154'X  * PCL5 cmd: Font selection
308       FNTEND=''X                        * PCL5 cmd: End font request (optional)
309       FNTWTH=                           Individual character widths
310      /* -0-1-2-3-4-5-6-7-8-9-A-B-C-D-E-F */
311        '22ADAEA78FBEA777EFABEF7F696869AA'X      /* 00- */
312        '62625184635A92515656ADAD93AD6B6B'X      /* 01- */
313        '484A52747BB3A526514D5D933042255E'X      /* 02- */
314        '706673707E78747370763B478F938F5E'X      /* 03- */
315        'C9A19E9AB3A6A4A6C86C8FB095E6BCA1'X      /* 04- */
316        '9CA19D7F91A59DDBAF93937420744978'X      /* 05- */
317        '33747060825D95807B42747B46B1796B'X      /* 06- */
318        '9371645647745E907B7467760D7658AC'X      /* 07- */
319        '9A746474747474675D675D564B39A5A1'X      /* 08- */
320        'A6A1ED6B706B747480A1A5688496DB95'X      /* 09- */
321        '74536D7482BC57525E9393A8A64B6262'X      /* 0A- */
322        'C7EFEF107F7F96967F963C9696967F7F'X      /* 0B- */
323        '7FEFEF7FEFEF7F969696EFEF96EFEFEF'X      /* 0C- */
324        'EFEFEF967F7F96EFEF7F7FEFEF7878EF'X      /* 0D- */
325        '82A47F81907079609193815AAD804994'X      /* 0E- */
326        '959395953E3F939546251FC467475722'X.     /* 0F- */
327     :EINDFNT.                         End individual font definition
328     :ASCCPINFO.                       Begin ASCII code page information
329     :CODEPAGE                         Set code page
330       CODEPAGE=  437                    ASCII code page to be selected: 437
331       DATA ='1B28313055'X.              * PCL5 cmd: Select symbol set
332     :CODEPAGE                         Set code page
333       CODEPAGE=  850                    ASCII code page to be selected: 850
334       DATA ='1B28313255'X.              * PCL5 cmd: Select symbol set
335     :EASCCPINFO.                      End ASCII code page information
336 :EWSCST.                              End WSCST table
                            * * * *  E N D  O F  S O U R C E  * * * *
```

The following is detailed information about the tags, the PCL5 commands, and what is modified in your print output. The numbers in the left column refer to the sequence number in the preceding transform table listing shown on page 150.

001-002 WSCST for device class of transform.

003-003 TRNSFRMTBL (Transform table). Defines a transform table for an ASCII printer that uses host print transform function.

There are no keyword parameters associated with this tag. However, it is immediately followed by a number of separate printer function tags that make up the table entries.

004-005 PRTDTASTRM (Printer data stream). Identifies the data stream supported by the ASCII printer. The host print transform supports the following data streams: EPSON, HPPCL4, HPPCL5, IBMGRAPHICS, IBMPPDS1, IBMPPDS2, IBM3812, NEC.

Note: PostScript is not supported.

006-037 NOPRTBDR (No-print border). Allows you to compensate for the default margin values of your printer. The default margin values include the no-print border (area on which printing cannot be done). You may find the no-print border referred to as the *unprintable area* or *unprintable border* in your printer manual.

The NOPRTBDR tag requires the following parameters:

OPTION Defines the border type. You can specify TOP, LEFT, RIGHT, or BOTTOM.

ORIENT Defines the type of paper orientation. Some printers have different unprintable areas based on the orientation. You can specify PORTRAIT or LANDSCAPE.

DATA Specifies the value used to compensate for the margin values in 1/1440-inch increments.

The following example explains the use of this tag. Assume your printer has a 1/2 inch top margin (the default value for the IBM 4039, HPIII, HP4) and your print output starts at line 7. The 6 blank lines before, at 6 CPI, represents 1 inch. In this case, your first printed line (line 7) will be 1 1/2 inches from the top edge of the physical paper (1/2 inch + 1 inch). To compensate for the top margin, the system will use the NOPRTBDR tag for the top margin. If the DATA parameter of the tag contains the value 720 (720/1440 inch = 1/2 inch), the host print transform only advances 1/2 inch before printing the first line. The value defined in the tag is subtracted from any space (blank lines) before the first printed line.

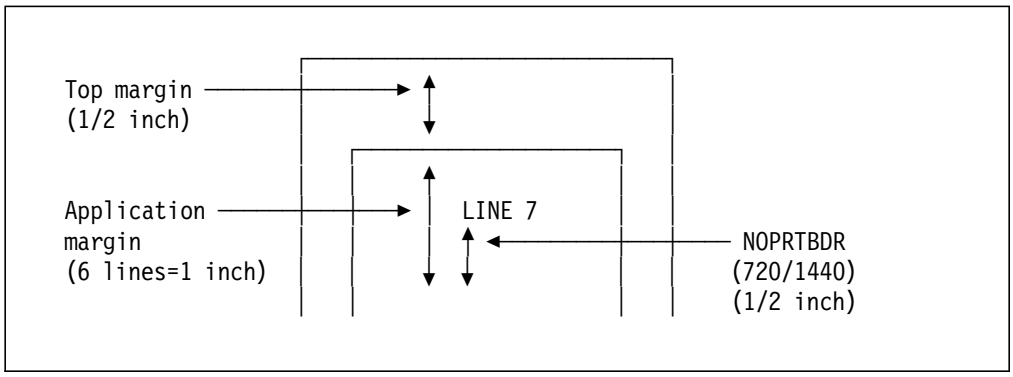

Figure 80. NOPRTBDR Tag Example

A print output (6 LPI) starting at line 1, 2, 3, or 4 will start printing at the same place with a top margin of a 1/2 inch and a NOPRTBDR tag top margin value of 720 (1/2 inch). This is because the first printing line outside the margin is line 4 (At 6 LPI, 1/2 inch = 3 lines).

If the no-print border is defined, it is included in the top, bottom, left, and right margins used for an AS/400 print output jobs. No-print border is also defined for portrait and landscape orientation. For this

reason you can see eight NOPRTBDR tags (line 6, 10, 14, 18, 22, 26, 30, and 34 on page 150).

Note: With V2R3, V3R0.5 and V3R1 the default top margin (1/2 inch on most ASCII printers using PCL4 or PCL5) can be modified on some printers (such as IBM4039, HP). See 6.4.2, "Customizing the Top Margin" on page 170, for more detailed information.

038-039 INITPRT (Initialize printer). Defines the PCL5 command to initialize the printer. The command *Reset printer* is used. The reset printer command restores the printer default setting. The host print transform uses this command at the beginning of each print job.

040-041 RESETPRT (Reset printer). Defines the PCL5 command to reset the printer. The command *Reset printer* is used. The reset printer command restores the printer default setting. The host print transform uses this command after every job.

042-043 BELL (Bell). Specifies the PCL5 control code for the bell function.

044-045 SPACE (Space). Specifies the PCL5 control code for the space function.

046-047 BSP (Backspace). Specifies the PCL5 control code for the backspace function.

048-049 CARRTN (Carriage return). Specifies the PCL5 control code for the carriage return function.

050-051 FORMFEED (Form feed). Specifies the PCL5 control code for the form feed function.

052-053 LINEFEED (Line feed). Specifies the PCL5 control function for the line feed function.

054-069 VERRMOV (Vertical relative movement). Defines the PCL5 command used to move the print position upward or downward relative to the current print position. You can have up to two VERRMOV tags: one for relative movement upward (line 54), and one for relative movement downward (line 62). The command *Vertical cursor position* is used. The VERRMOV tag requires the following parameters:

DIRECTION Defines the direction of the relative movement command. The possible entries are: UP, DOWN, or UPDOWN. UPDOWN defines the relative movement in both directions.

VAROFFSET Variable offset. Specifies the offset to the variable portion (or parameter) in the command.

VARLEN Variable length. Specifies the length of the variable (or parameter) in the command.

VARTYPE Defines the type of variable used with the command. The possible entries are: HIGHLOW, LOWHIGH, CHRDEC, CHRHEX, CHRAN. Many printers (4039, HP) use CHRDEC (Character decimal).

CNVNUM Defines the numerator of the conversion ratio.

CNVDEN Defines the denominator of the conversion ratio.

DATA Specifies the PCL5 command to move the cursor. The command parameter X'00000000' (decimal blank) is filled in by the host print transform during the transformation based on the position of the data in the spooled file.

The cursor is used to position the data on the ASCII printer. During the transformation from SCS to ASCII, the vertical cursor movement parameter is filled in with the cursor movement value. For example, the vertical cursor position command on line 61 is for a direction upward (line 55), the parameter starts at offset 4 (line 56, start counting from 0), the parameter length is 4 (line 57), the variable is CHRDEC, character decimal format (line 59), and the conversion ratio numerator (line 59) and denominator (line 60) are used to convert the vertical movement in decipoints (1/720-inch). This information allows the host print transform to specify the parameter value in the PCL5 command *Vertical cursor position* (line 61).

070-085 HORRMOV (Horizontal relative movement). Defines the PCL5 command used to move the print position forward or backward relative to the current print position. You can have up to two HORRMOV tags, one for the relative movement forward (line 70), and one for the relative movement backward (line 78). The command *Horizontal cursor position* is used. The HORRMOV tag requires the following parameters:

DIRECTION Defines the direction of the relative movement command. The possible entries are: FWD, BCK, or FWDBCK. FWDBCK defines the relative movement in both directions.

VAROFFSET Variable offset. Specifies the offset to the variable portion (or parameter) in the command.

VARLEN Variable length. Specifies the length of the variable (or parameter) in the command.

VARTYPE Defines the type of variable used with the command. The possible entries are: HIGHLOW, LOWHIGH, CHRDEC, CHRHEX, CHRAN. Many printers (4039, HP) use CHRDEC (Character decimal).

CNVNUM Defines the numerator of the conversion ratio.

CNVDEN Defines the denominator of the conversion ratio.

DATA Specifies the PCL5 command to move the cursor. The command parameter X'000000' (decimal blank) is filled in by the host print transform during the transformation based on to the position of the data in the spooled file.

The cursor is used to position the data on the ASCII printer. During the transformation from SCS to ASCII, the horizontal cursor movement parameter is filled in with the cursor movement value. For example, the horizontal cursor position command on line 77 is for a direction forward (line 71), the parameter starts at offset 4 (line 72, start counting from 0), the parameter length is 3 (line 73), the variable is CHRDEC, character decimal format (line 74), and the conversion ratio numerator (line 75) and denominator (line 76) are used to convert the horizontal movement in decipoints (1/720-inch). This information allows the host

print transform to specify the parameter value in the PCL5 command *horizontal cursor position* (line 77).

086-089 STRBOLD/ENDBOLD (Start/End bold printing). Defines the PCL5 commands to start and end bold printing. The command *Select stroke weight* is used. In the command used for the STRBOLD tag, the parameter value X′33′ (decimal 3) selects bold. In the command used for the ENDBOLD tag, the parameter value X′30′ (decimal 0) selects medium.

090-093 STRSUBS/ENDSUBS (Start/End subscript function). Defines the PCL5 commands to start and end the subscript function. The command *Set vertical cursor position* is used. In the command used for the STRSUBS tag, the parameter value X′2B 2E 33′ (decimal +0.3) moves the cursor downward 0.3 of a row. In the command used for the ENDSUBS tag, the parameter value X′2D 2E 33′ (decimal -0.3) moves the cursor upward 0.3 of a row (back to the original position).

094-097 STRSUPS/ENDSUPS (Start/End superscript function) Defines the PCL5 commands to start and end the superscript function. The command *Set vertical cursor position* is used. In the command used for the STRSUPS tag, the parameter value X′2D 2E 33′ (decimal -0.3) moves the cursor upward 0.3 of a row. In the command used for the ENDSUPS tag, the parameter value X′2B 2E 33′ (decimal +0.3) moves the cursor downward 0.3 of a row (back to the original position).

098-099 STRUS (Start underscore function). Defines the PCL5 command to start the underscore function. The command *Select underscore type* is used. In the command used for the STRUS tag, the parameter value X′30′ (decimal 0) selects the fixed underscore type (underline 5 pels below the cursor).

100-101 ENDUS (End underscore function). Defines the PCL5 command to end the underscore function. The command *Disable underscore* is used. The command disable underscore has no parameters.

102-108 VARLSPC (Variable line spacing). Defines the PCL5 command used to set variable line spacing on the printer. Variable line spacing, if defined, overrides fixed line spacing (LPI). If you do not define variable line spacing, the host print transform will search for a Lines per inch (LPI) tag. In this case, the LPI tag will specify the Lines per inch value, for example 6 or 8. The command *Set vertical motion index* is used. The VARLSPC tag requires the following parameters:

VAROFFSET (Variable offset). Specifies the offset to the variable portion (or parameter) in the command.

VARLEN (Variable length). Specifies the length of the variable (or parameter) in the command.

VARTYPE Defines the type of variable used with the command. The possible entries are: HIGHLOW, LOWHIGH, CHRDEC, CHRHEX, CHRAN. Many printers (4039, HP) use CHRDEC (Character decimal).

CNVNUM Defines the numerator of the conversion ratio.

CNVDEN Defines the denominator of the conversion ratio.

DATA Specifies the PCL5 command to move the cursor. The command parameter X′000000′ (decimal blank) is filled in by the host print transform during the transformation and determines the space between lines.

For example, the *Set vertical motion index* command on line 108 is used by the VARLSPC tag (line 102). The command parameter starts at offset 3 (line 103, start counting from 0), the parameter length is 3 (line 104), the variable is CHRDEC, character decimal format (line 105), and the conversion ratio numerator (line 106) and denominator (line 107) are used to convert the vertical line spacing in 1/48 inch value. This information allows the host print transform to specify the parameter value in the PCL5 command *Set vertical motion index* (line 77).

109-126 CPICOR (Characters per inch in computer output reduction), specifies the parameters for setting the number of characters per inch while in COR mode. The CPICOR tag includes the following parameters:

CPI Specifies the current number of characters per inch before the reduction. The possible entries are 10, 12, or 15.

ASCIIFNT Specifies the global font ID (FGID) to be used when the reduction is applied.

FNTWTH Specifies the width of the font specified in the parameter ASCIIFNT. For example, if you use a 17-pitch font (17 characters per inch), divide the increment by the number of characters per inch (1440 divided by 17). This gives you a font width of 85 (rounded off).

FNTATR Specifies the attribute value for the substituted font. This is the one specified in the parameter ASCIIFNT. The possible values are 01 (Fixed pitch), 02 (Proportional-spaced font), and 04 (Typographic font).

DATA An optional parameter. Specifies the PCL5 command to select a font to be used when reduction is applied. If there is no command, ′′X must be specified and the values specified for ASCIIFNT, FNTWTH, and FNTATR are used to select the COR font. If a command is specified, the font specified in the command parameter is used.

For example, the CPICOR tag on line 109 is used to select a COR FGID for all the print output in 10 CPI (line 110). The FGID 255 (line 111) with a width of 84 (line 112) and a fixed pitch (line 113) will be used to print in COR mode.

More than one CPICOR tag can be present in the table. In the example, CPICOR tags are on lines 109, 115, and 121.

127-138 PRTPORIENT (Paper orientation). Defines the PCL5 command to set the paper orientation. The command *Set paper orientation* is used. In the PRTPORIENT tag, the parameter ORIENT is a required parameter. This parameter can be set to PORTRAIT, LANDSCAPE, RTT180, or RTT270.

In the command used for PRTPORIENT tag, the parameter value corresponds to the ORIENT parameter. For example, on line 128 ORIENT=PORTRAIT and on line 129, the command parameter value is X′30′ (decimal 0). This is the value to select portrait.

More than one PRTORIENT tag can be present in the table, based on the rotation characteristics of the printer. In the example, PRTORIENT tags are on lines 127, 130, 133, and 136.

139-140 SMPXPRT (Simplex printing), defines the PCL5 command to set the printer to simplex mode. The command *Single-sided/duplex print* is used. In the command used for the SIMXPRT tag, the parameter value X′30′ (decimal 0) selects the simplex mode.

141-142 DUPXPRT (Duplex printing), defines the PCL5 command to set the printer to duplex mode. The command *Single-sided/duplex print* is used. In the command used for the DUPXPRT tag, the parameter value X′31′ (decimal 1) selects the duplex mode.

143-144 TUMDUPXPRT (Tumble-duplex printing), defines the PCL5 command to set the printer to tumble-duplex mode. The command *Single-sided/duplex print* is used. In the command used for the TUMDUPPRT tag, the parameter value X′32′ (decimal 2) selects the tumble-duplex mode.

145-156 DWRSLT (Drawer selection), defines the PCL5 command to select the paper feed. The command *Select paper feed* is used. In the DWRSLT tag, the parameter DRAWER is a required parameter. This parameter can be set to PAPER (manual feed), DRAWER1, DRAWER2, or ENVELOPE.

In the command used for the DWRSLT tag, the parameter value corresponds to the DRAWER parameter. For example, on line 146 DRAWER=PAPER (manual feed) and on line 147, the command parameter value is X′32′ (decimal 2). This is the value to select manual feed.

More than one DWRSLT tag can be present in the table, if your printer has more than one paper source. In the example, DWRSLT tags are on lines 145, 148, 151, and 154.

157-182 PAGSIZXFM (Page size for transform), defines one or more PAGSIZE (Page size) tags. The PAGSIZE tag defines the PCL5 command to set the page size. The command *Set paper size* is used and the command parameter contains the value to select a specific paper format. The last PAGSIZE tag must be followed by an EPAGSIZXFM (End page size for transform) tag. The PAGSIZE tag includes the following parameters:

PAGWTH Page width, specifies the width of the page in 1/1440-inch increments.

PAGLEN Page length, specifies the length of the page in 1/1440-inch increments.

DATA Specifies the PCL5 command to set the paper size. The command parameter must correspond to the format defined in the PAGWTH and PAGLEN.

For example, for LETTER format the PAGWTH is 12240 (line 171), the PAGLEN is 15840 (line 172) and the PCL5 command contains X′3032′ (decimal 02) as the parameter (line 173). When divided by the unit of measure (1/1440 inch) these values result in 8 1/2 by 11 inches.

Your printer′s technical reference manual will give you the format code for the different paper sizes.

In order to select the correct paper size during the transformation, your printer file must contain the exact paper size in the PAGESIZE parameters, or if using OfficeVision/400, the exact page size in the document format parameters. The host print transform will convert these values and check if they match one of the PAGSIZE tag's parameters. Then, if a match is found, the printer will request you to load the correct paper if it is not the default one. If no match is found, the paper format is selected based on the paper source 1 or 2 (PPRSRC1/2) parameter in the printer device description (default paper size).

If you use the host print transform function for sending a spooled file (for example in the command SNDTCPSPLF) and if no match is found, the default value of the workstation customized object specified in the SNDTCPSPLF command is used. This default value can be *LETTER or *CONT depending the WSCST used and you cannot change it.

Note: In order to specify the correct paper size in the printer file, use centimeter or inch values in the PAGESIZE parameter. You can do this by specifying measurement method **UOM* and **CM or *INCH* in the parameter *Unit of Measure*.

183-208 ENVSIZXFM

ENVSIZXFM (Envelope size for transform). Defines one or more ENVSIZE (Envelope size) tags. The ENVSIZE tag defines the PCL5 command to set the envelope size. The command *Set paper size* is used and the command parameter contains the value to select a specific envelope format. The last ENVSIZE tag must be followed by an EENVSIZXFM (End envelope size for transform) tag. The ENVSIZE tag includes the following parameters:

ENVWTH Envelope width. Specifies the width of the envelope in 1/1440-inch increments.

ENVLEN Envelope length. Specifies the length of the envelope in 1/1440-inch increments.

DATA Specifies the PCL5 command to set the envelope size. The command parameter must correspond to the format defined in the ENVWTH and ENVLEN.

For example, for a C5 envelope the ENVWTH is 12960 (line 201), the ENVLEN is 9216 (line 202) and the PCL5 command contains X'3931' (decimal 91) in the parameter (line 207). Your printer's technical reference manual will give you the format code for the different envelope sizes.

In order to select the correct envelope size during the transformation, your printer file must contain the exact envelope size in the PAGESIZE parameters, or if using OfficeVision/400, the exact page size in the document format parameters. The host print transform will convert these values and check if they match one of the ENVSIZE tag's parameters. Then, if a match is found, the printer will request you to load the correct envelope if it is not the default one. If no match is found, the envelope format is selected based on the envelope (ENVELOPE) parameter in the printer device description (default envelope size).

If you use the host print transform function for sending a spooled file (for example in the command SNDTCPSPLF) and if no match is found, the default value of the workstation customized object specified in the SNDTCPSPLF command is used. This default value can be *NUMBER10, or *NONE depending the WSCST used and you cannot change it.

Note: In order to specify the correct envelope size in the printer file, use centimeter or inch values in the PAGESIZE parameter. You can do it by specifying measurement method **UOM* and **CM or *INCH* in the parameter *Unit of Measure*.

209-233 FNTGRP (Font groups). Defines the beginning of one or more font group entry (FNTGRPE) tags. The last FNTGRPE must be followed by an end font group (EFNTGRP) tag. For example, in the *IBM4039HP WSCST the FNTGRP tag is on line 209, the FNTGRPE tag is on line 210, and the EFNTGRP tag is on line 233.

The FNTGRPE tag defines a range of font IDs and the PCL5 command to select the font to use for the defined range of font IDs. The host print transform searches first in the individual font definitions and then, if no match is found, in the font group definition. The FNTGRPE tag requires the following parameters:

MINFID Minimum font ID. Specifies the font identifier with the lowest number in the group.

MAXFID Maximum font ID. Specifies the font identifier with the highest number in the group.

FNTSTR Font start. Defines the PCL5 command to select the unique font that will be used for the font IDs defined in the group. The FNTSTR tag can contain more than one command, or a linked command, to select the font and the attributes of the selected font. For example, the following commands can be specified: *Select stroke weight, Select pitch, Select spacing, Select style, Select typeface, and Select point size*.

Note: The default font from the printer setup can also be specified. In this case use the PCL5 command *Default font*.

FNTEND Font end. Defines the PCL5 command to end a font request. This is an optional parameter. If no command is specified, ''X must be entered.

Note: The FNTEND parameter is used mainly with dot matrix printers. For example, a 5 CPI font can be selected on a dot matrix printer by using the command *Begin double wide printing*. Then, before we can select another font, we need to end this font with the command *End double wide printing*. In this case the parameter FNTEND will contain the command *End double wide printing*.

FNTWTH Font width. Defines the individual character widths in 1/1440-inch increments for the font selected. This parameter is optional, and if specified must be either a 256-byte or 512-byte hexadecimal value table. If no font width data is defined, ''X must be entered.

For example, in the listing of the *IBM4039HP customized object, the FNTGRPE tag on line 210 defines a font ID range from 154 (line 211) to 200 (line 212). The font IDs between 154 and 200 are replaced by the font selected in the FNTSTR parameter (line 213). The FNTSTR parameter contains a linked PCL5 command to select:

- Proportional spacing (Select spacing command)
- Point size 12 (Select point size command)
- Upright (Select style command)
- Medium (Select stroke weight command)
- Font ID 4101, CG Times (Select typeface command)

The parameter FNTEND contains ''X (line 214) as no end font request is specified, and the FNTWTH parameter specifies a table of 256 hexadecimal values (line 215).

Note: For more information on fonts, see 6.4.1, "Customizing Fonts" on page 168.

234-327 INDFNT (Individual font). Defines the beginning of one or more individual font entry (INDFNTE) tags. The last INDFNTE must be followed by an end individual font (EINDFNT) tag. For example in the *IBM4039HP WSCST, the INDFNT tag is on line 234, the INDFNTE tags are on lines 235, 258, 281, and 306, and the EINDFNT tag is on line 327.

The INDFNTE defines an individual font ID and the PCL5 command to select it. The host print transform searches first in the individual font definitions and then if no match is found, in the font group definitions. The INDFNTE tag requires the following parameters:

FID Font identifier. Specifies the font identifier (FGID) you want to map to a font on your printer.

POINTSIZE Point size. Specifies the point size of the individual font in 1/72-inch increments. If the point size is not required (for example, if you are defining a fixed-pitch font), 0 (zero) must be entered.

FNTSTR Font start. Defines the PCL5 command to select the font that will be used for the font IDs defined in the FID tag. The FNTSTR tag can contain more than one command, or a linked command, to select the font and the attributes of the selected font. For example, the following commands can be specified: *Select stroke weight, Select pitch, Select spacing, Select style, Select typeface, and Select point size*.

Note: The default font from the printer setup can also be specified. In this case use the PCL5 command *Default font*.

FNTEND Font end. Defines the PCL5 command to end a font request. This is an optional parameter and if no command is specified, ''X must be entered.

Note: The FNTEND parameter is used mainly with dot matrix printers. For example, a 5 CPI font can be selected on a dot matrix printer by using the command *Begin double wide printing*. Then, before we can select another font, we need to end this font with the command *End double wide printing*. In this

case the parameter FNTEND will contain the command *End double wide printing*.

FNTWTH Font width. Defines the individual character widths in 1/1440-inch increments for the font selected. This parameter is optional, and if specified must be either a 256-byte or 512-byte hexadecimal value table. If no font width data is defined, ''X must be entered.

For example, in the listing of the *IBM4039HP customized object, the INDFNTE on line 304 defines a font ID 189 (line 305). The font ID 189, without a point size specified (0 in line 306), is replaced by the font selected in the FNTSTR parameter (line 307). The FNTSTR parameter contains a linked PCL5 command to select:

- Proportional spacing (Select spacing command)
- Point size 12 (Select point size command)
- Italic (Select style command)
- Bold (Select stroke weight command)
- Font ID 4101, CG Times (Select typeface command)

The parameter FNTEND contains ''X (line 308) as no end font request is specified, and the FNTWTH parameter specifies a table of 256 hexadecimal values (line 309).

Note: For more information on fonts, see 6.4.1, "Customizing Fonts" on page 168

328-335 ASCCPINFO (ASCII code page information), defines the beginning of one or more code page (CODEPAGE) tags. The last CODEPAGE tag must be followed by an end ASCII code page information (EASCCPINFO) tag. For example, in the *IBM4039HP WSCST, the ASCCPINFO tag is on line 328, the CODEPAGE tags are on lines 330 and 333, and the EASCCPINFO tag is on line 335.

The CODEPAGE tag defines the PCL5 command to select the ASCII code page. The command *Select symbol set* is used. The CODEPAGE tag requires the following parameters:

CODEPAGE Code page. Specifies the identifier ID of the ASCII code page to be selected.

DATA Specifies the PCL5 command to select the code page specified in the code page parameter.

For example, the CODEPAGE tag on line 332, is used to select code page 850 (line 333). The parameter of the PCL5 command *Select symbol set* on line 334, contains X'313155 (decimal 12U) and selects the PC-850 code page. The parameter values for specific code pages are documented in the printer's technical reference manual.

Note: A PTF has been issued (SF20135 for V2R3, SF20213 for V3R1) which changes the ASCII default code page for Finland, Sweden, Norway, and Denmark to 850 instead of 865.

336-336 EWSCST (End WSCST table). Specifies the end of the transform table.

6.3.5 Creating the Workstation Customizing Object

After you have completed your changes to the workstation customizing source table in the source file member, use the Create Workstation Customizing Object (CRTWSCST) command. The CRTWSCST command creates a customizing object. To compile and create the workstation customizing object, do the following:

1. Type CRTWSCST and press F4(Prompt).
2. Press F10(Additional parameters).

   You will receive the following display:

```
                            Create WSCST (CRTWSCST)

 Type choices, press Enter.

 WSCST name . . . . . . . . . . . . > IBM4039CUS    Name
   Library  . . . . . . . . . . . . >   ROCHLIB     Name, *CURLIB
 Source member  . . . . . . . . . .   SRC4039HP     Name, *WSCST
 Text 'description' . . . . . . . .   *SRCMBRTXT

                            Additional Parameters

 Source file  . . . . . . . . . .     QTXTSRC       Name
   Library                              ROCHLIB     Name, *CURLIB
 Authority  . . . . . . . . . . .     *LIBCRTAUT    Name, *LIBCRTAUT, *Change..
 Replace object . . . . . . . . .     *YES          *YES, *NO

                                                                        Bottom
 F3=Exit   F4=Prompt   F5=Refresh   F12=Cancel   F13=How to use this display
 F24=More keys
```

Figure 81. Create WSCST Screen

3. Enter the following parameters:
   - The name of the customizing object (the one you want to create).
   - The library name for the customizing object.
   - The source file member name (the one containing the customized tag language).
   - The source file name.
   - The library name containing the source file.
   - Indicate whether or not this customizing object should replace an existing object of the same name.

After you create the customizing object, you can use it to customize one or more devices of the same type. For example, you may create a customizing object for an ASCII printer and you may want to use seven of these printers with your AS/400 system.

6.3.6 Specifying the Workstation Customizing Object

After you create the workstation customizing object, you need to specify the customizing object in the device description for the printer. Vary the ASCII printer you want to customize off and change the device description. Use the Change Device Description (Printer) (CHGDEVPRT) command to specify the customizing object in the device description for the printer.

Note: For all ASCII printers attached to the AS/400 through PC Support/400 Work Station Function (WSF), it is necessary to change the printer session profile to use your WSCST object. Use CFGWSF to change the Work Station Function. In the Select Printer Model display, select 8 (OTHER) and "User Defined-Laser Printer." Then, in the Personal Printer Options display, type the name of your WSCST object in the Customizing Object parameter. Save the session and Exit WSF configuration. The printer DEVD will automatically be changed when the printer session is restarted.

```
                    Change Device Desc (Printer) (CHGDEVPRT)

 ......................            .....         ...... ..... ....
 ......................            .....         .....  ..... .....
 Host print transform . . . . . .   *YES          *SAME, *NO, *YES
 Manufacturer type and model  . .   *WSCST
 Paper source 1 . . . . . . . . .   *LETTER       *SAME, *MFRTYPMDL, *LETTER...
 Paper source 2 . . . . . . . . .   *LETTER       *SAME, *MFRTYPMDL, *LETTER...
 Envelope source  . . . . . . . .   *NONE         *SAME, *MFRTYPMDL...
 ASCII code page 899 support  . .   *NO           *SAME, *NO, *YES
 .....................             .....         ...... .... ....
 .....................             .....         ...... .... ....
                           Additional Parameters
 Workstation customizing object     IBM4039CUS    Name, *SAME, *NONE
   Library  . . . . . . . . . . .     ROCHLIB     Name, *LIBL, *CURLIB

                                                                      Bottom
 F3=Exit   F4=Prompt   F5=Refresh   F12=Cancel   F13=How to use this display
 F24=More keys
```

Figure 82. Change Device Description (Printer) Screen

On your printer device description, specify *WSCST as the manufacturer type and model value in the MFRTYPMDL parameter. Then, specify the name of your customizing object in the workstation customized object field and the name of the library containing the object. Specifying the name of the object in the device description links the object to the device.

Then, vary the ASCII printer on. The host print transform function will use the customized object to map the data sent by the AS/400 system to the printer.

If using the remote system print function described in Chapter 2, "Remote System Printing" on page 31 you must change the output queue description to access the functions of the new customizing object. End all writers using the output queue and then use the CHGOUTQ command.

6.4 Customizing WSCST Hints and Tips

Be aware that the WSCST objects used by the host print transform function has a different format than those used by the InfoWindow* display or the ASCII WSC when the emulation (SCS to ASCII transform) in the InfoWindow or in the ASCII WSC is used in place of the host print transform. These objects must be converted manually and recompiled in order to have the WSCST object level used by the host print transform. The best method of doing this is to retrieve the source of the existing host print transform object and to modify it.

As the modification of the tables needs some knowledge about ASCII printers and the ASCII data stream, it should be done only by skilled and experienced people. You should always make a copy of the existing WSCST object before changing it in case your WSCST object will not create successfully because of errors.

As OfficeVision/400 provides a wide array of specific print functions, it could be useful to use a special OfficeVision/400 document which uses the needed print functions to test the new WSCST object.

A very helpful aid to analyze the data stream sent to an ASCII printer is the HEX DUMP function. It is available many ASCII laser printers (not available on HP printers). After initiating it, you will see the actual ASCII data stream being sent to the printer. You may compare these escape sequence commands or ASCII HEX bytes with the commands found in the technical reference books belonging to your ASCII printer. This will help you to detect errors or reasons why you should change your WSCST object again.

6.4.1 Customizing Fonts

You can do a font mapping between the font identifiers (FGIDs) found in your spooled file and the fonts your ASCII printer will use by selecting and customizing fonts. FGIDs can be customized by range or individually. For example, the 10 CPI fonts can be a group, and the 12 CPI another. In this case the 10 CPI will have a range from 01 to 65, and the 12 CPI from 66 to 153. Then all the FGIDs which are these groups will use the font and attributes defined in the STRFNT parameter part of the font group entry (FNTGRPE) tag. If you define an individual font entry, one FGID is mapped to the font and attributes defined in the STRFNT parameter part of the individual font entry (INDFNTE) tag.

The font group (FNTGRP) tag and the individual font (INDFNT) tag specify the commands to select the font to use in the start font (STRFNT) parameter. The following commands can be specified to define and select the requested font:

- **Select stroke weight**

  This command allows you to select the stroke thickness of the font characters. In the command parameter you can specify a code for ultra thin, extra thin, thin, extra light, light, demi light, semi light, medium, semi bold, demi bold, bold, extra bold, black, extra black, or ultra black.

- **Select pitch**

  The pitch command selects the number of characters per inch (CPI) for a fixed-spaced or monospaced bitmap or scalable font. For example, you can specify 10, 12, 15, or 16.67. This command is only used for fixed space fonts.

- **Select spacing**

The spacing command sets the character spacing as proportional or fixed.

- **Select style**

  The style command identifies the physical traits of a character and the composition of the font symbols. The command parameter allows you to select the following styles: upright, italic, condensed, condensed italic, compressed, expanded, outline, inline, shadowed, or outline shadowed.

- **Select point size**

  The point size command sets the font height in points. One point is 1/72 inch (0.35 mm) For example, you can specify a point size value of 6, 8, 10, or 12 points. Point size is used with typographic fonts.

- **Select typeface**

  The typeface command selects the font design. For example, on the IBM 4039 the following fonts are resident: Line printer, Courier, CG Times, ITC Zapf Dingbats**, and Univers**.

  Additional fonts are available on optional font cards, such as Helvetica, Times Roman, Letter Gothic, Prestige, or Orator.

  You can also specify that the printer use the default font specified in the printer setup. In this case you will have to use the command *Default font* in place of the command *Select typeface*.

Note: Refer to your printer's technical reference manual to check the supported font attributes, the available fonts, and the code you will have to put in the command for the command parameter.

When customizing fonts, consider the following:

- Individual font definitions are searched before font group definitions.
- The first font group definition that satisfies the font request is used.
- Remember that COR jobs choose fonts differently than non-COR jobs.
- If you do not specify font-width data, a system-supplied font width is used.
- You do not have to define font widths for fixed-pitch fonts unless the font you specify is outside the normal range of font identifiers for a particular pitch (CPI).

  For example, the normal range of font identifiers is from 1 to 65 for a 10-pitch typestyle. If the font group 1 to 65 is to be mapped to a font with a pitch greater than 10 CPI, you will have to define a font width for that font.

- If you specify a font-width, the data value must be either 256 or 512 bytes in length. A maximum width of 255/1440ths of an inch per character can fit in a single byte. If the font widths of all the characters can fit in a single byte, the data values are 256 bytes. If not, you will have to use two bytes and the table will have a 512 byte data value.
- To ensure your print jobs look similar to print jobs generated from the host, you must specify font-width data equal to, or less than, the font-width data used by the host application.

  For example, if you use the justify function with a proportional-spaced font in an OfficeVision/400 document, OV/400 uses its own internal font width to build the document to be printed. If the font widths defined in the table are not correct, the document may not justify properly.

- Font requests are automatically generated for IBM page printer data stream level 2, Hewlett-Packard PCL4, and Hewlett-Packard PCL5 tables.

6.4.2 Customizing the Top Margin

The default top margin for most of the ASCII page printers, using HP PCL4** or PCL5, is 1/2 inch. The top margin includes the no-print border (area on which printing cannot be done). The no-print border (NOPRTBDR) tag allows you to compensate for the top margin value, but not to change it.

To allow you to modify the top margin value a change was put in V2R3 with PTF SF18795, in V3R0.5 with PTF SF18048, and is part of V3R1. This enhancement allows you to specify a top margin of 1/4 inch (6.35 mm). In order to implement this change, your printer must support the following PCL5 commands (check in your printer's technical reference manual):

- Set text length
- Set top margin
- Vertical cursor position

The two following tags are now also used for ASCII printers in HP PCL4 and PCL5 mode:

- PAGLENL - Page length in lines
- PAGLENI - Page length in inches

To get this change to work, you need to add the following to your customized source object. You can add this just after the last NOPRTBDR tag.

```
01    :PAGLENL                          Page length in lines
02      VAROFFSET=    3                   Offset to variable in PCL5 cmd: 3
03      VARLEN=    3                      Variable length: 3
04      VARTYPE=CHRDEC                    Variable type: Decimal format
05      DATA ='1B266C00000046'X.          * PCL5 cmd: Set text length
06    :PAGLENI                          Page length in inches
07      VAROFFSET=    3                   Offset to variable in PCL5 cmd: 3
08      VARLEN=    3                      Variable length: 3
09      VARTYPE=CHRDEC                    Variable type: Decimal format
10      CNVNUM=    1                      Conversion ratio numerator: 1
11      CNVDEN=    1                      Conversion ratio denominator: 1
12      DATA ='1B266C000000451B2A7030323559'X. *PCL5 cmd: Set top margin
                                                and Vertical cursor position
```

001-005 PAGLENL (Page length in line). Defines the PCL5 command to set the number of lines of text on a page. The command *Set text length* is used. The PAGLENL tag requires the following parameters:

VAROFFSET (Variable offset). Specifies the offset to the variable portion (or parameter) in the command.

VARLEN (Variable length). Specifies the length of the variable (or parameter) in the command.

VARTYPE Defines the type of variable used with the command. The possible entries are: HIGHLOW, LOWHIGH, CHRDEC, CHRHEX, CHRAN. Many printers (4039, HP) use CHRDEC (Character decimal).

DATA Specifies the PCL5 command to set the text length. The command parameter X'000000' (decimal blank) is filled in by the host print transform during the transformation.

For example, the *Set text length* command on line 5 is used in the PAGLENL tag. The parameter starts at offset 3 (line 2, start counting from 0), the parameter length is 3 (line 3), and the variable is CHRDEC, character decimal format (line 4). This information allows the host print transform to specify the parameter value in the PCL5 command *Set text length* (line 5).

006-012 PAGLENI (Page length in inches) defines the PCL5 command to set the top margin, and to move the cursor in the vertical direction. The commands *Set top margin* and *Vertical cursor position* are used. The PAGLENI tag requires the following parameters:

VAROFFSET (Variable offset). Specifies the offset to the variable portion (or parameter) in the command.

VARLEN (Variable length). Specifies the length of the variable (or parameter) in the command.

VARTYPE Defines the type of variable used with the command. The possible entries are: HIGHLOW, LOWHIGH, CHRDEC, CHRHEX, CHRAN. Many printers (4039, HP) use CHRDEC (Character decimal).

CNVNUM Defines the numerator of the conversion ratio.

CNVDEN Defines the denominator of the conversion ratio.

DATA Specifies the PCL5 command to set the top margin and to move the cursor. The command parameter X'000000' (decimal blank) is filled in by the host print transform during the transformation.

For example, the *Set top margin* command on line 12 is used in the PAGLENI tag. The parameter starts at offset 3 (line 7, start counting from 0), the parameter length is 3 (line 8), the variable is CHRDEC, character decimal format (line 9), and the conversion ratio numerator (line 10) and denominator (line 11) are used to convert the vertical movement in lines (1/1 line). This information allows the host print transform to specify the parameter value in the PCL5 command *Set top margin* (the first command on line 12). The command *Vertical cursor position* (the second command on line 12) is used to position the cursor before printing.

Then you can change the top and bottom no-print border (NOPRTBDR) tags for the directions portrait and landscape. The data parameter must be changed from 720 to 360 (1440ths of an inch increments).

When you have made the changes, create your new customized object with the CRTWSCST command.

6.5 PCL5 Language Overview

This topic provides an overview of PCL5 language commands you can use with printers supporting this language. It also explains how you can link commands.

You must first understand how to distinguish between command and control codes. Commands control printer features, such as margin and line spacing, number of copies to print, and font selection. Control codes initiate printer functions, such as line feed (LF) and carriage return (CR).

PCL5 Language Commands

The first character, ESC (decimal 27 or hex 1B), notifies the printer that the following characters are a printer command rather than printable data. PCL5 language commands are also called escape sequences.

PCL5 Language Command Parameters

A command parameter sets the value for a command. This value stays constant until either a different value resets the command or a command resets the printer to its default values.

For example, after the printer receives a command that selects a right margin beginning at column 63, the right margin of each page begins at column 63. The margin remains constant until a right margin command with a different value resets the margin, or the printer is reset.

PCL5 Language Command Structure

Most PCL5 language commands have the following structure (spaces have been added for readability):

ESC & a # C

The PCL5 command structure is composed of:

ESC Escape character. Notifies the printer that the following characters are printer commands.

& Parameterized character from ASCII table range 33-47 decimal.

a Group character from ASCII table range 96-126 decimal that specifies a group type of control.

Command parameter, sets the value for a command. Value within specified numeric range.

C Termination character from ASCII table range 64-94.

For example, the PCL5 command *Set Paper Size* to set the printer with an A4 paper format would be as follows:

1B 26 6C 32 36 41 (in hexadecimal format)

ESC & l 2 6 A (in character format)

The command parameter is the value 26 (Hex 32 36). In the description of the PCL5 commands in the printer reference manual, the value 26 selects A4 paper. If you change this value to 02 (Hex 30 32), Letter format will be selected.

Linking PCL5 Language Commands

You can combine PCL5 language commands by linking them, if their first three bytes are identical. The combined, short form sends the first three bytes only once in the string. To combine commands:

- Make the last letter of the command to be combined lowercase.
- Use the first three bytes of the command only once at the start of the command string.

- Capitalize the last letter of the string.

For example, the following commands are related to font selection and can be combined into one command.

Select spacing, parameter value 1=proportional:
ESC (s 1 P *or in hexadecimal:* 1B 28 73 31 50

Select point size, parameter value 12=12 point:
ESC (s 1 2 V *or in hexadecimal:* 1B 28 73 31 32 56

Select style, parameter value 0=Upright:
ESC (s 0 S *or in hexadecimal:* 1B 28 73 30 53

Select stroke weight, parameter value 0=medium:
ESC (s 0 B *or in hexadecimal:* 1B 28 73 30 42

Select typestyle, parameter value 4101=CG Times:
ESC (s 4 1 0 1 T *or in hexadecimal:* 1B 28 73 34 31 30 31 54

As the 3 first bytes are always the same 1B 28 73, or ESC (s, the commands can be combined into one. The combined command is:

ESC (s 1 p 1 2 v 0 s 0 b 4 1 0 1 T
or in hexadecimal form:
1B 28 73 31 70 31 32 76 30 73 30 62 34 31 30 31 54

As you can see, the last characters of the single command P, V, S, B, and T are replaced by the lowercase characters p, v, s, b with the exception of the last one, which is T.

Chapter 7. Print Services Facility/400 (PSF/400)

Print Services Facility/400 (PSF/400) is the AFP system software for AS/400 printers that uses the Intelligent Printer Data Stream* (IPDS) printer protocol. It was an integrated component of the OS/400 operating system prior to OS/400 Version 3.0 Release 1.0. With V3R1, Print Services Facility/400 is offered as an orderable feature of OS/400. This chapter provides the following information:

- OS/400 print subsystems background
- Print Services Facility/400
- When do you need PSF/400?
- PSF/400 and PSF/2 DPF
- PSF/400 Feature options

7.1 OS/400 Print Subsystems Background

Until Version 1.0 Release 2.0 OS/400 in 1989, the OS/400 operating system had a single printing subsystem that supported all print application output, spool management and printer devices. Most AS/400 output was generated in the SNA Character String (SCS) print data format, and printed on SCS line printers.

The ability to specify DEVTYPE=*IPDS as an application output was added in the mid-1980s when OS/400 native print support also added device support for printers that use the IBM Intelligent Printer Data Stream (IPDS) printer protocol (for example IBM 4224, 3812, and 3816 printers). This capability was unique to the AS/400 system platform. On every other IBM operating system, for example MVS, VM, VSE, OS/2, and AIX, full support for IPDS printers is provided by a Print Services Facility (PSF) program. The IPDS printers and the PSF print subsystem are an implementation of IBM′s Advanced Function Printing (AFP) architecture for printing and presentation (also called the Mixed Object Content Document Architecture for Presentation, or MODCA-P).

An implementation of the AFP print subsystem was added to OS/400 in Version 1.0 Release 3.0 (1989) as an integrated component of the operating system. Version 1.0 is no longer in service. OS/400 was enhanced in subsequent releases to provide AFP print subsystem support similar to that in the S/390 PSF products. In OS/400 Version 2.0 there are, therefore, two separate printing subsystems in the operating system. OS/400 “native” print support continues to support line printers and a subset of IBM IPDS printers and print functions. Full support for all IPDS printers is provided by the integrated AFP printing subsystem. Which printing subsystem is used to process application output is determined by the Device Description definition for the target printers. Only printers defined as *IPDS and AFP(*YES) are controlled by the AFP printing subsystem.

Beginning with OS/400 Version 3.0 Release 1.0, the AFP printing subsystem is a separately orderable feature of OS/400 called Print Services Facility/400 (PSF/400).

OS/400 “native” print support for line printers and selected IPDS mid-range printers remains part of the OS/400 base operating system.

7.2 PSF/400 Overview

IBM's Advanced Function Printing (AFP) is an architecture that integrates high-function page printers and print software to:

- Enable state-of-the-art documents that can give your business a competitive edge with electronic forms.
- Provide sophisticated print formatting capabilities external to application programs.
- Replace traditional labor-intensive print operations with a system-managed process.

Print Services Facility/400 is the AFP system software for AS/400 printers that uses the Intelligent Printer Data Stream (IPDS) printer protocol. PSF/400 allows AS/400 users and applications to take full advantage of IPDS printer capabilities, including:

- Replace preprinted forms with electronic forms, called overlays.
- Format multiple pages of output, or multiple records, onto a single printed page using the hardware n-up function.
- Include compressed image data from programs such as Workfolder Application Facility/400 and Facsimile Support/400, and have the images decompressed and printed by an IPDS printer.
- Download fonts from AS/400 host libraries to printers for a greater choice of typestyles, or to ensure font consistency across printers.
- Process AFP applications that have been sent to the AS/400 from S/390 environments.

PSF/400 Version 3.0 Release 1.0 includes the following enhancements:

- Provides support for printing two 8 1/2 x 11 pages side by side on a single sheet.
- Provides additional performance improvements through support for printer-resident outline fonts and retention of overlays and page segments from job to job, which reduces setup and processing time.

Access to some AFP capabilities, such as electronic forms, downloadable host fonts, and all-points-addressable record formatting, have been incorporated into the familiar AS/400 print interfaces:

- Printer Files
- Data Description Specifications (DDS) for Printer Files

Additional AFP capabilities, such as the ability to use AFP Page and Form Definitions to format print records external to an application program, or to create a variety of customized "multiple-up" print formats, are enabled by the PrintManager*/400 APIs, which remains an integrated part of the OS/400 operating system.

Advanced Function Printing* Utilities/400, Program Product 5763-AF1 for AS/400, provides the ability to print AS/400 database files in various formats with a wide range of fonts and bar codes on printers driven by PSF/400, and to create AFP overlays and page segments.

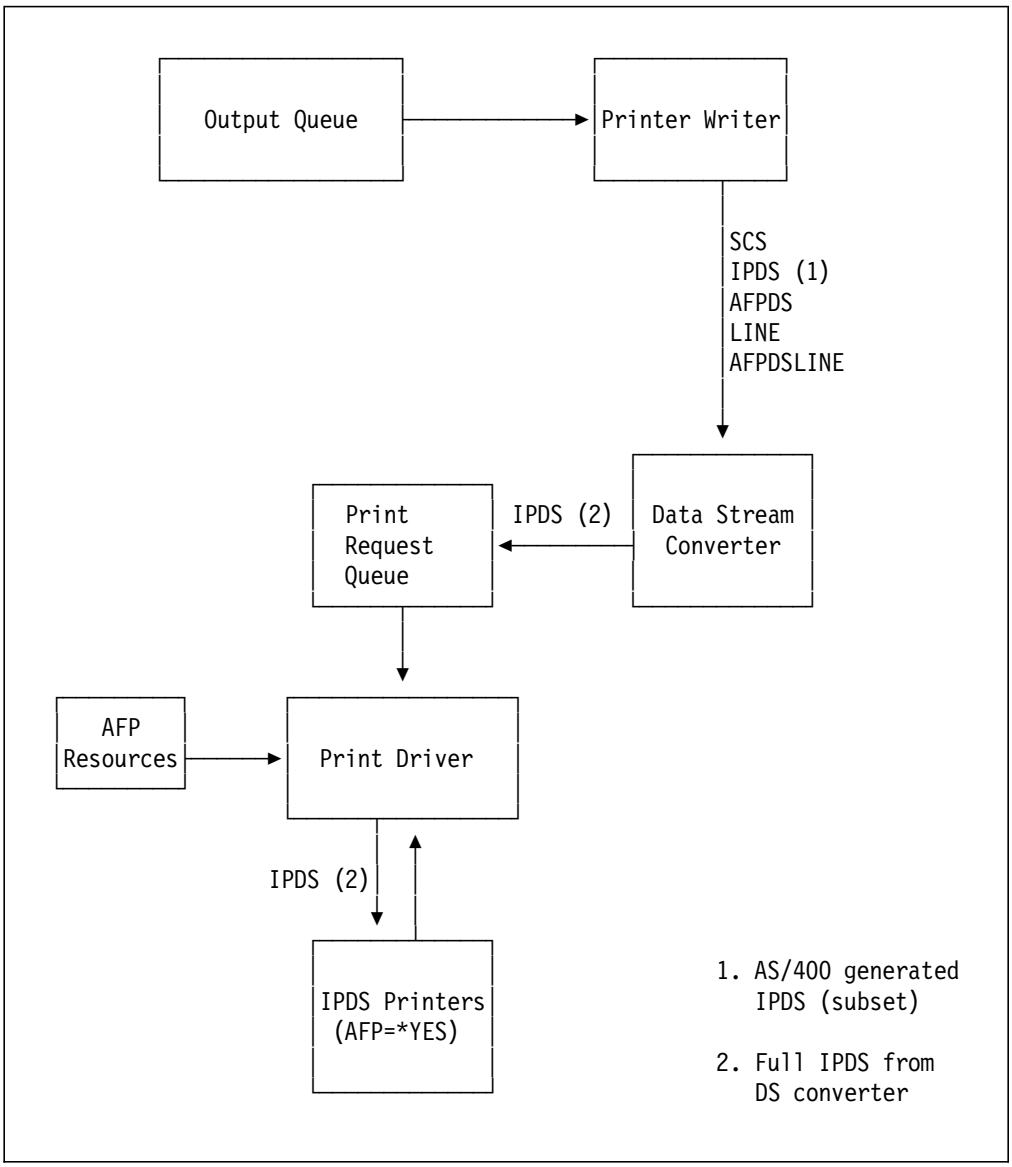

Figure 83. Print Services Facility/400 Process

PSF/400 also provides data stream transforms and AFP print resource management to ensure that applications and their AFP resources print consistently on all of the printers managed by PSF/400. PSF/400 can transform and print the following data streams on the AS/400 system:

- AFPDS
- SCS
- IPDS
- LINE
- AFPDSLINE (also called mixed mode)

PSF/400 combines application output with print resources such as electronic forms, fonts, page segments (images), and formatting definitions that are either included inline with the print output, or in AS/400 system libraries. PSF/400 then creates an IPDS output for the target AFP printer.

7.3 When Do You Need PSF/400?

The following discussion will help you determine when you need PSF/400 on your system. PSF/400 may be required or optional depending on different factors such as the type of printers attached, the Printer File parameters used, or the DDS keywords referenced.

7.3.1 When PSF/400 is Required

PSF/400 supports the entire family of IBM IPDS printers as well as IPDS printers from other vendors. PSF/400 is required in order to provide support for the following IBM IPDS printers, or “plug-compatible” printers from another vendor:

- IBM 3820 Page Printer
- IBM 3825 Page Printer
- IBM 3827 Page Printer
- IBM 3828 Advanced Function MICR Printer
- IBM 3829 Advanced Function Printer
- IBM 3831 Page Printer (in 3835 emulation mode; available only in Japan)
- IBM 3835-001 Page Printer
- IBM 3835-002 Advanced Function Printer
- IBM 3900 Advanced Function Printer
- IBM 3935 Advanced Function Printing Page Printer

PSF/400 is also required when:

- Any printer is defined to the AS/400 as *IPDS, AFP(*YES) in the Printer Device Description.
- Any Printer File used with applications submitted to print use the keyword AFPDS on the DEVTYPE parameter.
- Distributed print is used to IPDS, PCL4, or PCL5 printers attached to a Print Services Facility/2 (PSF/2 DPF).
- The AS/400 is used to print any AFPDS or S/390 line or mixed mode data from an IBM or IBM-compatible mainframe system.
- The Facsimile Support/400 program product is used.

7.3.2 When PSF/400 is Optional

When the following IPDS printers or IPDS printer models are installed or proposed, PSF/400 is optional. These printers can be driven by the OS/400 “native” print subsystem.

- IBM 3812 Page Printer
- IBM 3816 Page Printer
- IBM 3912 Page Printer
- IBM 3916 Page Printer
- IBM 3930 Page Printer
- IBM 4028 LaserPrinter
- IBM 4224 Printer (IPDS model)

- IBM 4230 Printer (IPDS model)
- IBM 4234 Printer (IPDS model)
- IBM 6408 Printer (IPDS model)
- IBM 6412 Printer (IPDS model)

However, PSF/400 is required if the customer wishes to take advantage of the functions provided by Advanced Function Printing (AFP).

Note: PSF/400 is required if any printer is defined on the AS/400 as *IPDS and AFP(*YES) in the printer device description.

7.3.3 PRTF Parameters and DDS Keywords that Require PSF/400

Printer Files (PRTF) and Data Description Specifications (DDS) are the user and application program interfaces for printing in AS/400. They will continue to be part of the operating system. Access to some AFP capabilities such as electronic forms (overlays), downloading fonts to a printer, including image "page segments" in a document, and others have been incorporated into these familiar AS/400 print interfaces for users and application programs.

The usage of the following Printer File (PRTF) parameters requires PSF/400 at print time:

Table 9. Printer File Parameters Requiring PSF/400

PRTF parameter	Value	Description	Comments
DEVTYPE	*AFPDS	Printer device type	
FRONTMGN	Any	Front margin	Only if DEVTYPE *AFPDS
BACKMGN	Any	Back margin	Only if DEVTYPE *AFPDS
FRONTOVL	Any	Front side overlay	
BACKOVL	Any	Back side overlay	
FNTCHRSET	Any	Font character set	Only if DEVTYPE *AFPDS
CDEFNT	Any	Coded font	Only if DEVTYPE *AFPDS
MULTIUP	2-up 3-up 4-up	Pages per side	PSF/400 on some printers PSF/400 on all printers PSF/400 on some printers
OUTBIN	Any	Output bin	Only if DEVTYPE *AFPDS

The usage of the following DDS keywords requires PSF/400 at print time. These keywords are only supported when the Printer File specifies *AFPDS as the Printer Device Type (DEVTYPE).

Table 10. DDS Keywords Requiring PSF/400			
DDS Keyword	**Value**	**Description**	**Comments**
BOX	Any	Box	Only if DEVTYPE *AFPDS
CDEFNT	Any	Coded font	Only if DEVTYPE *AFPDS
ENDPAGE	Any	End page	Only if DEVTYPE *AFPDS
FNTCHRSET	Any	Font character set	Only if DEVTYPE *AFPDS
GDF	Any	Graphics data file	Only if DEVTYPE *AFPDS
IGCCDEFNT	Any	IGC coded font	Only if DEVTYPE *AFPDS
LINE	Any	Line	Only if DEVTYPE *AFPDS
OVERLAY	Any	Overlay	Only if DEVTYPE *AFPDS
PAGSEG	Any	Page segment	Only if DEVTYPE *AFPDS
POSITION	Any	Position	Only if DEVTYPE *AFPDS
TXTRTT	Any	Text rotation	Only if DEVTYPE *AFPDS

7.4 PSF/400 and PSF/2 Distributed Print Function

The Distributed Print Function (DPF) of PSF/2 permits the use of PSF/2 within an AS/400 or S/390 distributed printing environment.

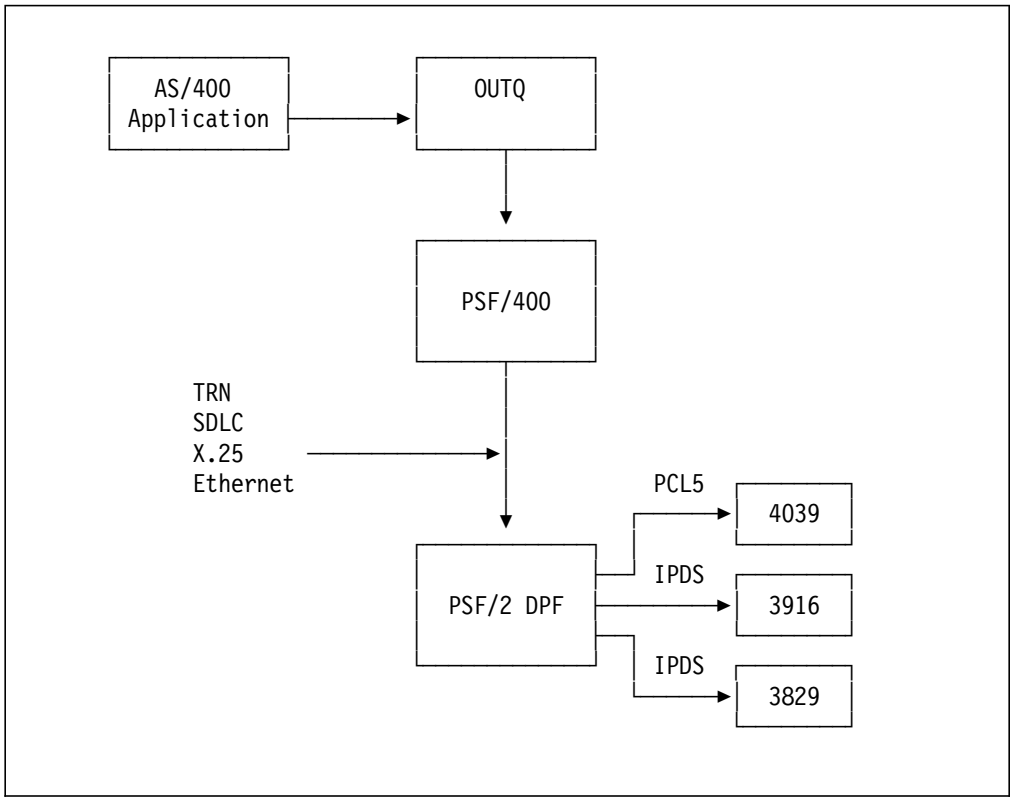

Figure 84. PSF/400 and PSF/2 Distributed Print Function

PSF/2 provides support for a wide range of IPDS printers, the IBM 4029 and 4039 page printers, and printers which accept the Hewlett-Packard (HP) PCL4 and PCL5 data streams. Each connection between an AS/400 and a printer has a

unique DPF host receiver. This receiver is responsible for spooling to the PC workstation each spooled file coming from the AS/400.

AS/400 views the PSF/2 DPF host receivers as a normal IPDS printer with the parameter AFP set to *YES. For this reason, in order to use the PSF/2 DPF, you will need to have PSF/400 on your AS/400.

7.5 PSF/400 Feature Options

PSF/400, an orderable feature of OS/400, is available with four different options depending on the speed of the fastest IPDS printer installed on the AS/400 and driven by the PSF/400 support.

There is an AS/400 Fax feature that has PSF/400 as a prerequisite and requires its own feature at an entry level.

The orderable feature is available with the four following options:

1. Facsimile only
2. IPDS printers 1-19 IPM
3. IPDS printers 20-45 IPM
4. IPDS printers from 46 IPM

Note: IPM = Impressions (a single side of a sheet) per minute.

Chapter 8. AS/400 Advanced Function Printers

The first section of this chapter covers the IBM IPDS printers and their functions, including a description of some of the available features. The section is divided into two parts:

- IPDS Laser Page Printers (IBM 4028, 381X, 391X, 393X, 382X, 3835, and 3900)
- IPDS Impact Printers (IBM 4224, 4230, 4234, 6408 and 6412)

The second section of the chapter describes AFP resources and their usage on the AS/400. For example, we will discuss how they can be downloaded from a System/370* and how they are used with native AS/400 applications.

8.1 AS/400 IPDS Laser Printers

This section briefly describes all the IPDS laser page printers that can be connected to the AS/400. For a complete description of each product refer to the specific announcement letters.

8.1.1 IBM 4028-AS1

The IBM LaserPrinter 4028 is a compact, non-impact, desktop page printer. The IBM 4028 provides excellent print performance for documents containing images graphics, and bar codes through the use of an internal RISC processor with print speeds of up to 10 pages per minute. The IBM 4028 is suitable for office and business professional environments where usage does not exceed 20,000 pages per month. The print addressability is 300-pel (dots-per-inch). The IBM 4028 includes 32 internal fonts.

The IBM 4028 provides a 200-sheet letter/A4-size input tray and a 250-sheet output bin with an output-full sensor. Options include a 500-sheet second drawer with a letter/A4-size paper tray, an automatic envelope feeder, a 1MB memory feature and a variety of font cards.

The IBM 4028 is capable of printing from edge to edge, with microcode level 01Y or later. This microcode level provides an additional configuration switch (switch 14) that can be set to either edge -to-edge or print area.

If switch 14 is set to print area, or if your 4028 has an earlier microcode level than 01Y, then the printable area is limited to within 0.16-inches (4.1 mm) of any edge of the media. Any information placed within 0.16 inches (4.1 mm) of the edge will not print (except on A4 paper). For A4 paper, any information which is placed within 0.13-inches (3.4 mm) of either side or 0.16-inches (4.1 mm) of either the top or bottom of the media will not print.

5.5.1, “IBM 4028 and its Logical Page Origin” on page 112 discusses the position of the logical page origin on a 4028 printer and the ways to move this origin.

Desktop magnetic ink character recognition (MICR) printing on the IBM 4028 is now available using the 4028 MICR Request for Price Quotation (RPQ). This RPQ provides a 4028 that always uses MICR toner. Security is provided via the capability of downloading the MICR font(s) at the beginning of a job and then deleting the MICR font(s) at the end of the job (similar to signature security). System management and error recovery is via PSF.

The modified 4028 is adjusted to provide print quality that is acceptable for MICR scanning. MICR scanning acceptability is determined by several factors: print quality and print registration of the printer; quality of the magnetic toner used combined with printer characteristics; MICR scanning equipment, including document registration; and the quality of the paper used for the application. Check printing should be done with a high-quality 24-pound paper.

For more information, see RPQ #S02177.

If you use the Distributed Print Facility of PSF/2, only the IBM 4028 Model NS1 (coaxial) can be attached to PSF/2. The functions of the IBM 4028-NS1 are the same as those of the IBM 4028-AS1 detailed above.

8.1.2 IBM 3812-002

The IBM 3812-002 is a multi-function, non-impact page printer of table-top design. The IBM 3812-002 provides letter-quality text and all-points-addressable graphics, prints at up to 12 pages per minute, and is designed to produce up to 18,000 pages per month. The IBM 3812 uses a light emitting diode (LED) print head, with a print resolution of 240-pel. Basic paper-handling functions include dual input cassettes for legal and letter-size xerographic paper, and gummed labels.

Note: The IBM 3812 was withdrawn from marketing on June 30, 1992.

8.1.3 IBM 3912

The IBM 3912 Page Printer is a compact, non-impact desktop laser printer. The IBM 3912 is complementary to the IBM 4028 and adds extended performance for many applications, including documents containing images, graphics and bar codes. The IBM 3912 operates at a print speed up to 12 impressions per minute and is ideally suited for office and business professional environments where the usage does not exceed 50,000 impressions per month. The print addressability is 300-pel (dots-per-inch) for all its modes of operation, except PostScript mode, where it can print PostScript level 1 output using Print Quality Enhanced Technology at up to eight impressions a minute and 600-pel (600 dots-per-inch) resolution.

There are four models of the IBM 3912. The AFP model that attaches to the AS/400 using twinaxial cable is the AS1. In addition to the twinaxial attachment the IBM 3912 also has a Centronics* parallel and a RS-232/RS-422 serial interface which support PCL5 and PostScript level 1 data streams. The IBM 3912 can automatically switch between the ports and the different data streams to allow it to be shared between the AS/400 host and a PC network.

The IBM 3912 provides a 200-sheet letter/A4-size or legal-size input tray and a 250-sheet output bin. Standard memory for IPDS pattern storage is 2MB. Options include a duplex feature which reduces the capacity of the standard input bin to 130-sheets, a second 500-sheet input drawer with letter/A4-size or legal-size paper tray, an automatic envelope feeder or an auxiliary 100-sheet paper feeder, and additional 4MB or 8MB IPDS pattern memory cards.

The input and output paper capacities are based on 20 lb (75 grams/square meter) weight of paper. The printer can accept paper weights between 16 lb and 24 lb (60 and 90 grams/square meter) for feeding automatically from any of the input bins. The IBM 3912 does also have a manual feeder as standard which will accept paper weights between 20 lb and 175 lb (75 and 285 grams/square meter).

The IBM 3912 has a non-printable border on all four sides of the page. The size of this border can be adjusted in size, but the printer cannot print within 0.16 inch (4.06mm) of any edge. However, a new RPQ is available which makes it possible to print some data within the unprintable border; this feature is called the Expandable Printable Area (XPA) option. It is important that you understand how to set up the printer configuration to position data correctly on the page both with and without the XPA. 5.6, “IBM 3912 and 3916 Print Output Presentation” on page 118 explains how to configure the IBM 3912 to position your data correctly on the page.

8.1.4 IBM 3816

The IBM 3816 Page Printer is a multi-function, non-impact page printer of table-top design. The following models are available:

3816-01S The IBM 3816-01S provides letter-quality text and all-points-addressable graphics at a maximum speed of 24 pages per minute and is designed for an average usage of 40,000 pages per month. The IBM 3816 is capable of producing up to 80,000 pages per month. However, continuous printing in this mode will impact product life. Text and full-page graphics are printed at 240-pel.

The IBM 3816-01S offers 1.5MB of memory for printer operations and resident font storage and 2MB for page map storage. The IBM 3816 operating software, fonts, and diagnostics are contained on a 1.44MB diskette which is inserted into a diskette drive in the printer.

3816-01D The IBM 3816-01D is a duplex version of the 3816-01S. It has a maximum speed of 24 impressions per minute, and has the same usage-per-month figures as the 3816-01S.

The IBM 3816-01D offers 1.5MB of memory for printer operations and resident font storage and 4MB for page map storage. The IBM 3816 operating software, fonts, and diagnostics are contained on a 1.44MB diskette which is inserted into a diskette drive in the printer.

The IBM 3816 Page Printer (01S/01D) has two input paper cassette feed slots. Labels, transparencies, and card stock feed from the top cassette only. There is one available top slot cassette type:

- Primary cassette: 550 cut sheets of 20 lb (75 grams/square meter (g/m2)) paper of any size (not intermixed), or 150 sheets of transparencies or card stock, or 100 sheets of labels.

There are two available bottom cassette types:

- Alternate cassette: 250 cut sheets of 20 lb (75 g/m2) paper of any size (not intermixed).
- High capacity paper input (feature): 1200 cut sheets of 20 lb (75 g/m2) paper of letter or A4 size.

The standard output tray (3816 01S/01D) contains 550 cut sheets of 20 lb (75 g/m2) paper, or 150 sheets of special media. The high capacity paper output (3816-01D feature) contains 1500 cut sheet of 20 lb (75 g/m2) paper, or 800 cut sheets of 20 lb (75 g/m2) Legal paper size, or 300 sheets of special media.

Note: The IBM 3816 was withdrawn from marketing on February 28th 1994.

8.1.5 IBM 3916

The IBM 3916 Page Printer is a compact, non-impact desktop laser printer. The IBM 3916 is complementary to the IBM 4028 and IBM 3912 and adds extended performance for many applications, including documents containing images, graphics and bar codes. The IBM 3916 operates at a print speed up to 16 impressions per minute and is ideally suited for office and business professional environments where the usage does not exceed 75,000 impressions per month. The print addressability is 300-pel (dots-per-inch) for all its modes of operation, except PostScript mode, where it can print PostScript level 1 output using Print Quality Enhanced Technology at up to eight impressions a minute and 600-pel (600 dots-per-inch) resolution.

There are four models of the IBM 3916. The AFP model that attaches to the AS/400 using twinaxial cable is the AS1. In addition to the twinaxial attachment the IBM 3916 also has a Centronics Parallel and a RS-232/RS-422 Serial interface which support PCL5 and PostScript level 1 data streams. The IBM 3916 can automatically switch between the ports and the different data streams to allow it to be shared between the AS/400 host and a PC network.

The IBM 3916 provides a 500-sheet letter/A4 size or legal size input tray and a 500-sheet output bin. Standard memory for IPDS pattern storage is 2MB. Options include a duplex feature which reduces the capacity of the standard input bin to 300-sheets, a second 500-sheet input drawer with letter/A4-size or legal-size paper tray, an automatic envelope feeder or an auxiliary 100-sheet paper feeder, and additional 4MB or 8MB pattern memory cards.

The input and output paper capacities are based on 20 lb (75 grams/square meter) weight of paper. The printer can accept paper weights between 16 lb and 24 lb (60 and 90 grams/square meter) for feeding automatically from any of the input bins. The IBM 3916 does also have a manual feeder as standard which will accept paper weights between 20 lb and 175 lb (75 and 285 grams/square meter).

The IBM 3916 has a non-printable border on all four sides of the page. The size of this border can be adjusted in size, but the printer cannot print within 0.16-inch (4.06mm) of any edge. However, a new RPQ is available which makes it possible to print some data within the unprintable border; this feature is called the Expandable Printable Area (XPA) option. It is important that you understand how to set up the printer configuration to position data correctly on the page both with and without the XPA. 5.6, “IBM 3912 and 3916 Print Output Presentation” on page 118 explains how to configure the IBM 3916 to position your data correctly on the page.

8.1.6 IBM 3820

The IBM 3820 Page Printer offers users a versatile, highly reliable cut-sheet printer. It produces sharp, clear printed output at speeds of up to 20 pages per minute and handles production volumes of up to 100,000 pages per month. The print addressability is 240-pel.

The IBM 3820 has two input paper supplies. The primary drawer has a capacity of 1,100 sheets of paper, and the secondary drawer a capacity of 250 sheets of paper. The output stacker can contain up to 1,250 sheets of paper.

Note: The IBM 3820 was withdrawn from marketing on February 16th 1994.

8.1.7 IBM 3930

The IBM 3930 Page Printer is IBM's new mid-range page printer intended to replace the IBM 3816. The IBM 3930 is similar in size to the IBM 3816 and is a multi-function, non-impact page printer of table-top design. The following IPDS models are available:

3930-02S The IBM 3930-02S provides letter-quality text and all-points-addressable graphics at a maximum speed of 30 impressions per minute and is designed for a maximum usage of 150,000 impressions per month.

3930-01D The IBM 3930-01D is a duplex version of the 3930-01S It has the same maximum speed and monthly usage.

Both these models attach to an AS/400 using twinaxial cable, by specifying the optional feature #9217. The 3930 operating software, IPDS fonts and diagnostics are contained on two 1.44MB diskettes which are inserted into two diskette drives in the printer.

The IBM 3930 comes with the same standard input paper cassettes that were used on the IBM 3916. The primary (top) cassette has a capacity of 550 sheets of 20 lb (75 grams/square meter) paper of any size up to legal. Labels, transparencies and card stock can also be fed from this cassette.

The secondary (bottom) cassette has a capacity of 250 sheets of the same weight and size of paper. Labels, transparencies and card stock can not be fed from this cassette.

The standard output tray has a capacity of 550 sheets of paper.

You can optionally replace the lower input bin, and/or the output tray with high capacity bins.

The high capacity input bin replaces the lower input bin and has a capacity of 1200 sheets of 20 lb (75 grams/square meter) paper of any size up to letter/A4. legal size paper, labels, transparencies or card stock are not supported for the high capacity input bin.

The high capacity output bin replaces the standard output bin and has a capacity of 1400 sheets of 20 lb (75 grams/square meter) paper of any size up to letter/A4. legal size paper is not supported for the high capacity output bin.

8.1.8 IBM 3935

The IBM 3935 Advanced Function Printer introduces new levels of connectivity, performance, flexibility and capacity to AS/400 AFP printing. The IBM 3935 can print at a maximum rated speed of 35 impressions per minute, has duplex capability as standard and can handle a monthly volume of 200,000 impressions.

The IBM 3935 can be attached to the AS/400 with twinaxial cable, across a local area network (LAN) using IBM SNA Token-Ring, or host distributed using an SNA SDLC attachment.

The printing resolution is 300-pel (dots-per-inch).

The IBM 3935 has the most flexible paper handling of any printer in its class. It supports 4 input bins which between them give a total input capacity of 3,350

sheets of 20 lb (75 grams/square meter) paper and a range of paper sizes from 8.5 x 5.5 inches to 11 x 17 inches, including ISO A3 (297 x 420 mm). Output capacity is handled by two output stackers which have a total capacity of 2250 sheets. Both these output stackers are supported by Version 3.0 Release 1.0.

The high input and output paper capacities, together with the flexibility of four input bins make this printer ideal for unattended operation.

8.1.9 IBM 3825

The IBM 3825 Page Printer is an all-points-addressable, non-impact, cut-sheet, duplex printer which provides high-quality Advanced Function Printing. It uses an electrophotographic process on a variety of paper sizes to print at speeds of up to 58 impressions per minute. The IBM 3825 has a recommended usage of up to 1,000,000 impressions per month. The print addressability is 240-pel and the print quality is enhanced with character edge smoothing and fine-line enhancement. The primary operator interface to the IBM 3825 is via a CRT display with a touch-sensitive panel.

The IBM 3825 has a dual input supply. The primary (bottom) supply contains approximately 2600 sheets. The alternate (top) supply contains approximately 500 sheets. The single output stacker can contain up to 3150 sheets, the paper being stacked face-down in the proper page order, with job offset between jobs.

An RPQ provides an auxiliary paper supply. This third paper input source (cassette) provides an additional 500 sheets. It implements full duplex capability and increases the input capacity. The RPQ reference is:

- RPQ #B4229 for USA
- RPQ #B4231 for EMEA

The Advanced Function Image and Graphics (AFIG) feature is available as an option. For detailed information on AFIG refer to 8.1.15, “IPDS Laser Printer Features” on page 192.

8.1.10 IBM 3827

The IBM 3827 Page Printer is a high-speed, non-impact, cut-sheet duplex printer which provides high-quality Advanced Function Printing. It uses an electrophotographic process on a variety of paper sizes to print at speeds up to 92 impressions per minute. The IBM 3827 has a recommended usage of up to 2,000,000 impressions per month. The print addressability is 240-pel using light emitting diode (LED) print head technology. The operator control uses a visual display unit with keyboard.

The IBM 3827 has a dual input supply. The primary (lower) supply contains approximately 2340 sheets; the alternate (upper) supply approximately 935 sheets. Duplex printing is only possible from the primary (lower) input supply. The single output stacker can contain up to 2340 sheets, with the paper being stacked face-down in the proper page order.

An RPQ, #8A5051, provides duplex operation from each of the two input drawers.

The Advanced Function Image and Graphics (AFIG) and the Decompression Performance Enhancement (DPE) features are available as options. For detailed information on AFIG and DPE, refer to 8.1.15, “IPDS Laser Printer Features” on page 192.

8.1.11 IBM 3828 MICR

The IBM 3828 Advanced Function Magnetic Ink Character Recognition (MICR) Printer is a high-speed, non-impact, cut-sheet, duplex all-points-addressable printer that uses a 14-inch LED print head and an electrophotographic process to create printed output. It prints on a variety of paper sizes at speeds up to 92 impressions per minute. The print density is 480-pel.

MICR printing allows financial institutions to reduce costs and improve their customer responsiveness by eliminating the need for expensive, printed MICR forms and standard preprinted forms.

The 3828 uses magnetic toner for all printing.

The IBM 3828 has two input paper supplies. The lower paper supply can hold approximately 2500 sheets of 20 lb (75 g/sqm) paper. The upper paper supply can hold approximately 1000 sheets of 20 lb (75 g/sqm) paper. The stacker holds up to 2500 sheets of 20 lb (75 g/sqm) paper. Printed jobs can be offset from each other to allow for easy separation of jobs.

The Advanced Function Image and Graphics (AFIG) support is included as standard on all IBM 3828s. For detailed information on AFIG, refer to 8.1.15, “IPDS Laser Printer Features” on page 192.

8.1.12 IBM 3829

The IBM 3829 Advanced Function Printer is a high-speed, non-impact, cut-sheet, duplex all-points-addressable printer that uses a 14-inch LED print head and an electrophotographic process to create printed output. It prints on a variety of paper sizes at speeds up to 92 impressions per minute. The print density is 480-pel.

The IBM 3829 has two input paper supplies. The lower paper supply can hold approximately 2500 sheets of 20 lb (75 g/sqm) paper. The upper paper supply can hold approximately 1000 sheets of 20 lb (75 g/sqm) paper. The stacker holds up to 2500 sheets of 20 lb (75 g/sqm) paper. Printed jobs can be offset from each other to allow for easy separation of jobs.

The Advanced Function Image and Graphics (AFIG) support is included as standard on all IBM 3829s. The Decompression Performance Enhancement feature (DPE) is available as an option. For detailed information on AFIG and DPE, refer to 8.1.15, “IPDS Laser Printer Features” on page 192.

8.1.13 IBM 3835

The IBM 3835-002 is a fanfold (continuous paper) page printer which provides high-quality Advanced Function Printing.

Note: The IBM 3835 Model 2 (announcement January 26, 1993) has replaced the IBM 3835 Model 1, which was withdrawn from marketing on June 30th, 1993. Model conversion from model 1 to model 2 were withdrawn from marketing on June 30th 1994.

The IBM 3835 Page Printer Model 2 provides a new level of performance and print quality as compared to the existing 3835 Model 1. Beyond increasing the speed from 88 to 91 impressions per minute, the Enhanced Model 2 provides, as standard, the control unit function of the IBM Enhanced 3900 Page Printer. This includes:

- 4MB of pattern storage
- Increased control unit processing speed
- Enhanced operator alert facility
- Fuser Preheat Platen Temperature Control feature
- Advanced Function Image and Graphics feature (AFIG)

The enhanced Model 2 also provides improved print quality through greater optical density (darker text and greater uniformity of solid-area fill), and through print-quality enhancement (edge smoothing, fine details and boldness control). On the IBM 3835-002 the non-print border is eliminated (1/6 inch unprintable border on 3835-001). The IBM 3835-002 is capable of printing up to 1.3 million feet (1.8 million pages) per month.

The print addressability of both models is 240-pel.

The paper input supply has a capacity (height) of 16 inches (406 mm) of folded paper. The output stacker has a maximum capacity of 13 inches (330 mm) of paper. The stacker can only stack paper with lengths between 3 and 14 inches (76 and 356 mm). The paper dimensions supported are:

Width 6.5 to 16 inches (165 to 406 mm) continuously variable. The maximum print width is 16 inches (381 mm).

Length 3 to 14 inches (76 to 356 mm) in 1/3 and 1/2 inch increments are supported by the standard stacker.

Additionally, a form length of 17 inches (431.8 mm) may be printed but cannot be stacked with the standard stacker. Feature #4010 (Pre/Post-Processing Interface) must be installed to disable the standard stacker when printing this form length.

A3 paper (297 x 420 mm) falls within the preceding guidelines as it must be printed with the 420 mm dimension as the length.

The Decompression Performance Enhancement feature (DPE) is available as an option. For detailed information on AFIG and DPE see 8.1.15, “IPDS Laser Printer Features” on page 192.

To print text data using magnetic ink character recognition (MICR) with the 3835, you must use the 3835 MICR Printing RPQ (RPQ #8B4400, with RPQ #8A5022 as a prerequisite), which sends the form through an attached MICR post-processing device.

8.1.14 IBM 3900

The IBM 3900 Advanced Function Printer is a high-speed, non-impact, fanfold printer which provides improved printing process on a wide range of paper weights and sizes, printing at speeds up to 229 pages per minute.

The IBM 3900 printer is now available in three models.

- The IBM 3900 Advanced Function Printer was upgraded from February 1st 1994 to provide enhanced printing quality.
- The IBM 3900-01W Advanced Function Printer was announced on February 1st 1994, and offers a 17-inch wide printing capability on 18-inch wide stationery. This printer now allows the printing of two letter-size, or A4-size

pages, side by side, giving a realized throughput of up to 458 pages per minute.

- The IBM 3900 Advanced Function Duplex Printing System was announced on November 16th, 1993 and offers customers very high speed, high capacity duplex printing.

8.1.14.1 IBM 3900 Advanced Function Printer

The IBM 3900 now has a much enhanced print quality which gives a much blacker print, consistent solid area fill, and edge smoothing of diagonal lines to protect the fine details in images and logos.

The printable area on the IBM 3900 can be as large as 15 x 16 2/3 inches (381 x 423 mm). Large form sizes may enable the printing of new applications such as maps, wiring diagrams, and building plans. A3 paper can be printed in the portrait direction (a Pre/Post Processor RPQ and suitable post-processing equipment is required).

The standard machine now includes the following functions, some of which were previously available only as separate features:

- The Advanced Function Image and Graphics Feature (AFIG)
- New memory technology providing up to 20% improvement in performance
- 4MB of standard pattern storage
- The Preheat Platen Temperature Control to allow the user more flexibility in paper stock choices
- The enhanced Operator Alert facility

The Decompression Performance Enhancement (DPE) is available as an optional features. For detailed information on DPE and AFIG, refer to 8.1.15, “IPDS Laser Printer Features” on page 192.

To print text data using magnetic ink character recognition (MICR) with the 3900, you must use the Advanced Function Printing Post-processing Interface, feature #4720, which sends the form through an attached MICR post-processing device.

Notes:

1. Printers shipped prior to March 11th 1994 can be upgraded to the new specification with feature #4830.
2. OS/400 Version 2.0 Release 2.0 or higher is recommended in order to attach an IBM 3900 to the AS/400.

8.1.14.2 IBM 3900-01W Advanced Function Printer

The new IBM 3900-01W can now print up to 17-inches wide on stationery up to 18-inches wide, enabling 2-up side-by-side printing of letter-sized or ISO A4-sized pages. This 2-up capability provides a throughput speed of 352 8.5 x 11-inch page per minute (332 ISO A4 pages per minute).

The IBM 3900-01W also includes the Decompression Performance Enhancement feature also standard.

Note: Planned availability for the IBM 3900-01W is March 30th 1995. the 3900-001 cannot be upgraded to this new model.

8.1.14.3 IBM 3900 Advanced Function Duplex Printing Subsystem

The IBM 3900 duplex provides up to 300 impressions per minute duplex printing onto continuous forms. The system utilizes two print engines which can be operated together to produce duplex printing, or as two independent simplex printers each with a throughput speed of up to 150 pages per minute.

The new Advanced Function Common Control Unit (AFCCU) controls both print engines (when operating in either duplex or dual simplex modes) and is attached to the second engine in the system. This new control unit is based on IBM's recognized Reduced Instruction Set Computer (RISC) technology and includes the following standard features:

- 64MB of standard pattern storage
- The Advanced Function Image and Graphics feature (AFIG)
- The Decompression Performance Enhancement feature (DPE)
- Improved Memory Performance (IMP)
- Scaling Performance Enhancement for Compressed Images

Note: Customers with an existing IBM 3900-001 can upgrade this printer to be the first engine in a duplex configuration.

8.1.15 IPDS Laser Printer Features

This section covers the features available on some IBM AFP Laser Printers to enable the printing of IOCA (Image Object Content Architecture) images and GOCA (Graphic Object Content Architecture) graphics, as well as to enhance the performance of the printer.

8.1.15.1 Advanced Function Image and Graphics Feature #4200 (AFIG)

The IBM Advanced Function Image and Graphics feature for the IBM 3825, 3827, 3829, 3835-001, and 3900 Page Printers provides a new set of capabilities that will improve current text and IM1 image performance, expand current image processing functions by supporting IOCA image format, and process vector graphics GOCA commands on the supported printers.

This feature supports printer image decompression of Image Object Content Architecture (IOCA) data streams that were compressed by the following industry standard compression routines: CCITT Group 3 and 4, IBM Modified Modified Read (IBM MMR) and Adaptive Bilevel Image Compression (ABIC).

Graphic Object Content Architecture (GOCA) graphics commands are supported (at GOCA internal level DR/2 V0) for execution by the printer control unit.

Notes:

1. Feature #4200 is standard on the IBM 3828, 3829 and 3835-002.
2. Feature #4200 is optional on the IBM 3825, 3827, 3835-001 and 3900.
3. Feature #4200 is not available on the IBM 3820.

8.1.15.2 Decompression Performance Enhancement Feature #4202 (DPE)

The Decompression Performance Enhancement feature for the IBM 3827, 3828, 3829, 3835-001, 3835-002, and 3900 Advanced Function Page Printers provides a hardware performance assist for decompressing IOCA image data streams that use the CCITT Group 3, CCITT Group 4, or IBM MMR data compression algorithms.

The Decompression Performance Enhancement feature provides a new level of performance in high-speed printer subsystems. It allows image-intensive printing applications, such as insurance policies, bank statements with check images, transportation bills-of-lading, and travel club map packages to print at much higher speeds, many at the printer's rated speed.

Notes:

1. AFIG (feature #4200) is a prerequisite for DPE (Feature #4202).
2. Feature #4202 is optional on the IBM 3827, 3828, 3829, 3835-001/002 and 3900.

8.1.16 IPDS Laser Printers and Their Functions

The following tables represent the functionality of the IBM family of IPDS Laser Printers when attached to the AS/400 and configured with the parameter AFP set to **YES*. Table 11 covers the functions of the small to medium sized printers and Table 12 on page 194 covers the medium to large printers.

Table 11 (Page 1 of 2). Small to Medium Sized IPDS Laser Printers and Their Functions

Printer Model	**4028 AS1**	**3812 002**	**3912 AS1**	**3916 AS1**	**3816 01S & 01D**	**3930 02S & 02D**	**3935**
Impressions per minute (IPM)	10	12	12	16	24	30	35
Twinaxial attach	Y	Y	Y	Y	Y	Y	Y[1]
TRN-direct attach							Y[2]
SDLC attach							Y[3]
PSF/2 Distributed Print Facility	Y[4]	Y[4]	Y[4]	Y[4]	Y[4]	Y[4]	Y[5]
Cut sheet	Y	Y	Y	Y	Y	Y	Y
Duplex			Y[6]	Y[6]	Y[7]	Y[7]	Y
Non-print border	Y[8]		Y	Y			
Two input bins	Y[6]	Y	Y[6]	Y[6]	Y	Y	Y[9]
Two output bins							Y
Overlay	Y	Y	Y	Y	Y	Y	Y
Page segment from AFP Utilities/400	Y	Y	Y	Y	Y	Y	Y
IM1 Image	Y	Y	Y	Y	Y	Y	Y
IO1 Image (IOCA)	Y	Y	Y	Y	Y	Y	Y
BGU, GDDM*	Y	Y	Y	Y	Y	Y	Y
Resident Fonts	Y	Y	Y	Y	Y	Y	Y
OfficeVision/400 Image-Graphics	Y	Y	Y	Y	Y	Y	Y
Font download	Y[10]	Y	Y[10]	Y[10]	Y	Y	Y[10]
DBCS Support						Y[6]	

Table 11 (Page 2 of 2). Small to Medium Sized IPDS Laser Printers and Their Functions

Printer Model	**4028 AS1**	**3812 002**	**3912 AS1**	**3916 AS1**	**3816 01S & 01D**	**3930 02S & 02D**	**3935**
OCR A/B	Y	Y	Y	Y	Y	Y	Y
Bar codes with DDS	Y	Y	Y	Y	Y	Y	Y
Bar codes from AFP Utilities/400	Y	Y	Y	Y	Y	Y	Y
AFP from S/370*	Y	Y	Y	Y	Y	Y	Y
Multiup[11]	Y	Y	Y	Y	Y	Y	Y
N-up[12]							Y
Facsimile Support/400	Y	Y	Y	Y	Y	Y	Y
ImagePlus/400* - WAF/400	Y	Y	Y	Y	Y	Y	Y

Notes:

1. The IBM 3935 requires feature 4140.
2. The IBM 3935 requires feature 4120.
3. The IBM 3935 requires either feature 4150 (19.2Kb analog) or feature 4160 (56Kb digital).
4. Twinaxial printers can only be driven be PSF/2 if they are attached to a 7913 IPDS Printer LAN Attachment.
5. The IBM 3935 can be driven by PSF/2 if it has feature 4121. A twinax model must be connected via a 7913 LAN Attachment.
6. Available as an optional feature.
7. Duplex is only supported on the 3816-01D and the 3930-02D.
8. Edge-to-edge printing is available with microcode level 01Y.
9. The IBM 3935 has 4 input bins as standard.
10. Only 300-pel fonts can be downloaded to this printer.
11. Multiup 2 or 4, rotation 0, 90, 180, 270, Reduce *TEXT.
12. Multiup 2, 3, or 4, rotation 0, Reduce *NONE (commonly called N-up).

Table 12 (Page 1 of 2). Medium to Large Sized IPDS Laser Printers and Their Functions

Printer Model	**3820**	**3825**	**3827**	**3828**	**3829**	**3835 001**	**3835 002**	**3900**	**3900 01W**	**3900 Duplex**
Impressions per minute (IPM)	20	58	92	92	92	88	92	229	229	300[1]
TRN-RPM/2 attach	Y[2]	Y	Y	Y	Y	Y	Y	Y	Y	Y
Distributed Print Facility-PSF/2	Y	Y	Y	Y	Y	Y	Y	Y	Y	Y
Cut sheet	Y	Y	Y	Y	Y					
Continuous forms						Y	Y	Y	Y	Y
Duplex		Y	Y	Y	Y					Y
Non-print border						Y				
Two input bins	Y	Y[3]	Y	Y	Y					
Advanced Function Image and Graphics (AFIG) feature		Y[4]	Y[4]			Y[4]	Y	Y	Y	Y

Table 12 (Page 2 of 2). Medium to Large Sized IPDS Laser Printers and Their Functions

Printer Model	**3820**	**3825**	**3827**	**3828**	**3829**	**3835 001**	**3835 002**	**3900**	**3900 01W**	**3900 Duplex**
Decompression Performance Enhancement (DPE) feature			Y[4]	Y[4]	Y[4]	Y[4]	Y[4]	Y[4]	Y	Y
Overlay	Y	Y	Y	Y	Y	Y	Y	Y	Y	Y
Page segment from AFP Utilities/400		Y[5]	Y[5]	Y	Y	Y[5]	Y	Y	Y	Y
IM1 Image	Y	Y	Y	Y	Y	Y	Y	Y	Y	Y
IO1 Image (IOCA)		Y[5]	Y[5]	Y	Y	Y[5]	Y	Y	Y	Y
BGU, GDDM		Y[5]	Y[5]	Y	Y	Y[5]	Y	Y	Y	Y
OfficeVision/400 Image-Graphics		Y[5]	Y[5]	Y	Y	Y[5]	Y	Y	Y	Y
Font download	Y	Y	Y	Y	Y	Y	Y	Y	Y	Y
DBCS support	Y[9]	Y	Y	Y	Y	Y	Y	Y	Y	Y
OCR A/B	Y	Y	Y	Y	Y	Y	Y	Y	Y	Y
Bar codes with DDS								Y	Y	Y
Bar codes from AFP Utilities/400	Y[6]	Y[6]	Y[6]	Y[6]	Y[6]	Y[6]	Y[6]	Y[6]	Y[6]	Y[6]
AFP from S/370	Y	Y	Y	Y	Y	Y	Y	Y	Y	Y
Multiup[7]	Y	Y	Y	Y	Y	Y	Y	Y	Y	Y
N-up[8]		Y	Y	Y	Y	Y	Y	Y	Y	Y
Facsimile Support/400		Y[5]	Y[5]	Y	Y	Y[5]	Y	Y	Y	Y
ImagePlus/400 - WAF/400		Y[5]	Y[5]	Y	Y	Y[5]	Y	Y	Y	Y

Notes:

1. The IBM 3900 duplex prints 300 IPM in duplex mode or as 2 x 150IPM simplex printers.
2. The IBM 3820 also attaches via an SDLC line.
3. A third input bin is available for the IBM 3825 as an optional RPQ.
4. Available as an optional feature.
5. Supported with the Advanced Function Image and Graphics feature (AFIG).
6. Supported with OS/400 and AFP Utilities/400 Version 2 Release 3 and later.
7. Multiup 2 or 4, rotation 0, 90, 180, 270, Reduce *TEXT.
8. Multiup 2, 3, or 4, rotation 0, Reduce *NONE (commonly called N-up).
9. Available as an optional feature.

8.2 AS/400 IPDS Impact Printers

This section briefly describes all the IPDS impact printers that can be connected to the AS/400. For a complete description of each product, refer to the specific announcement letters.

8.2.1 IBM 4224

The IBM 4224 Printer is a serial dot-matrix bidirectional impact printer. Three print modes are standard: DP, DP Text, and Near Letter Quality (NLQ). These three levels of print quality, combined with forms-handling options and extensive graphics capability, make the 4224 ideal for a variety of applications.

The maximum print line is 13.2 inches (335.8 mm), with a paper width from 3 inches (76.2 mm) to 15 inches (481 mm) on continuous forms. Multi-part forms support up to six parts (including original). Graphics printing is at 144-pel.

The Continuous Forms Device is shipped standard with each 4224 printer. In addition, the Document on Demand (feature #4002) and the Document Insertion Device (feature #4003) may be ordered for some 4224 models.

The following IBM 4224 models support Advanced Function Printing:

4224-102 This is the base model. The Document on Demand or the Document Insertion Device are available as features. Speeds range between 100 cps (characters per second) and 400 cps, depending on the print quality. This model is not recommended for printing graphics.

4224-1E2 This model has expanded storage (recommended for graphics printing). The Document on Demand or the Document Insertion Device are available as features. Speeds range between 100 cps (characters per second) and 400 cps, depending on the print quality.

4224-1C2 This model has expanded storage (recommended for graphics printing) and supports color printing. The color printing is four or eight colors as determined by the ribbon type. Speeds range between 100 cps (characters per second) and 400 cps, depending on the print quality.

4224-1E3 This model has expanded storage (recommended for graphics printing). The Document on Demand or the Automatic Sheet Feed are available as features. Speeds range between 150 cps (characters per second) and 600 cps, depending on the print quality.

8.2.2 IBM 4230

The IBM 4230 Printer is a family of heavy-duty serial impact matrix printers capable of printing up to 600 cps (characters per second). Ease-of-use features such as an 80-character liquid crystal display (LCD) operator panel make setup and daily operations more efficient by providing prompts and menu selections.

An automatic forms-thickness adjustment sets the gap between the print head and paper precisely, eliminating a user task and improving paper handling and print-head life. New forms-handling features include:

- The Continuous Forms Module (CFM).
- The Dual Purpose Module (DPM), which combines highly reliable feeding of continuous forms and minimal paper waste with the Document On Demand (DOD) function.
- The Document Insertion Device (DID).
- An optional Automatic Sheet Feed (ASF), which provides automatic feeding of cut sheets.

The following IBM 4230 models support Advanced Function Printing:

4230-1I1 This is the entry model and includes all the design features of the IBM 4230 Printer family. Speeds range between 75 cps and 375 cps depending on the print quality. This model can be upgraded to the Model 4230-102.

4230-102 This model is the medium-speed model of the IBM 4230 product family, with speeds up to 480 cps.

4230-4I3 This is the high-speed model of the IBM 4230 product family with speeds up to 600 cps. This model also has a Centronics Parallel and an RS-232/RS-422 serial port which allows the printer to be connected to a PC or LAN as well as to the AS/400. The printer cannot automatically switch between the twinax port and the serial/parallel port. Both ports can be simultaneously cabled, but it requires 4230 configuration changes to switch from one port to another.

8.2.3 IBM 4234

The IBM 4234 Dot Band Printers are line-matrix impact printers providing printing speeds up to 800 lpm (lines per minute). The IBM 4234s are floor-standing printers. Ease-of-use features include an enhanced operator panel with LCD text display, power-assisted forms loading, and an eject/restore function to reduce forms waste.

The following IBM 4234 models support Advanced Function Printing:

4234-8 The 4234-8 is the lowest model of the IBM 4234 family supporting AFP. Speeds range from 160 lpm to 475 lpm depending on the print quality. This model can be upgraded to the IBM 4234-12.

4234-12 This model provides speeds between 200 lpm and 800 lpm depending on the print quality.

8.2.4 IBM 6408

The IBM 6408 model CTA Line Matrix Printer offers a mid-range, heavy duty, continuous-forms line matrix printers which can print at speeds up to 800 (lpm) lines per minute depending upon the selected print quality.

This new AFP impact printer supports a wide variety of business and office documents, with excellent price/performance, and is compatible with the IPDS models of the IBM 4234. The IBM 6408-CTA offers equal or higher throughput and print quality than the 4234.

In addition to working in IPDS mode, the IBM 6408-CTA is also able to support SCS and ASCII data streams, and with the addition of optional features can also support the popular Code V and IGP graphics standards.

8.2.5 IBM 6412

The IBM 6412 model CTA Line Matrix Printer offers a mid-range, heavy duty, continuous-forms line matrix printers which can print at speeds up to 1200 (lpm) lines per minute depending upon the selected print quality.

This new AFP impact printer supports a wide variety of business and office documents, with excellent price/performance, and is compatible with the IPDS

models of the IBM 4234. The IBM 6412-CTA offers equal or higher throughput and print quality than the 4234.

In addition to working in IPDS mode, the IBM 6412-CTA is also able to support SCS and ASCII data streams, and with the addition of optional features can also support the popular Code V and IGP graphics standards.

8.2.6 AS/400 IPDS Impact Printers and Their Functions

The following table represents the functionality that the IBM family of IPDS Impact Printers have when attached to the AS/400 and configured with the parameter AFP set to **YES*.

Table 13 (Page 1 of 2). IPDS Impact Printers and Their Functions

Printer Model	**4224 102 1E2**	**4224 1C2**	**4224 1E3**	**4230 1I1**	**4230 102**	**4230 4I3**	**4234 8**	**4234 12**	**6408 CTA**	**6412 CTA**
Fast draft				375 cps	480 cps	600 cps	475 lpm	800 lpm	800 lpm	1200 lpm
Data Processing	400 cps	400 cps	600 cps	300 cps	400 cps	400 cps	350 lpm	600 lpm	600 lpm	900 lpm
Data Processing Text	200 cps	200 cps	300 cps	150 cps	200 cps	200 cps				
Near Letter Quality	100 cps	100 cps	150 cps	75 cps	150 cps	150 cps	160 lpm	200 lpm	320 lpm	480 lpm
Twinaxial attachment	Y	Y	Y	Y	Y	Y	Y	Y	Y	Y
Cut sheet			Y[1]	Y[1]	Y[1]	Y[1]				
Continuous forms	Y	Y	Y	Y	Y	Y	Y	Y	Y	Y
Duplex										
Two input bins			Y[1]	Y[1]	Y[1]	Y[1]				
Color		Y								
Overlay	Y	Y	Y	Y	Y	Y	Y	Y	Y	Y
Page segment from AFP Utilities/400										
IM1 Image	Y[2]	Y[2]	Y[2]	Y[2]	Y[2]	Y[2]	Y[2]	Y[2]	Y[3]	Y[3]
IO1 Image (IOCA)										
BGU, GDDM	Y	Y	Y	Y	Y	Y	Y	Y	Y	Y
OfficeVision/400 Image-Graphics	Y[4]	Y[4]	Y[4]	Y[4]	Y[4]	Y[4]	Y[4]	Y[4]	Y[4]	Y[4]
Fonts download										
DBCS support										
OCR A/B	Y	Y	Y	Y	Y	Y	Y	Y	Y	Y
Bar codes with DDS	Y	Y	Y	Y	Y	Y	Y	Y	Y	Y
Bar codes from AFP Utilities/400	Y	Y	Y	Y	Y	Y	Y	Y	Y	Y
AFP from S/370	Y	Y	Y	Y	Y	Y	Y	Y	Y	Y
Multiup[5]	Y	Y	Y	Y	Y	Y	Y			
N-up[6]										

Table 13 (Page 2 of 2). IPDS Impact Printers and Their Functions

Printer Model	**4224 102 1E2**	**4224 1C2**	**4224 1E3**	**4230 1I1**	**4230 102**	**4230 4I3**	**4234 8**	**4234 12**	**6408 CTA**	**6412 CTA**
Facsimile Support/400										
ImagePlus/400 - WAF/400										

Notes:

1. Automatic Sheet Feed feature available.
2. These AFP impact printers have a print resolution of 144-pel and do not support 240-pel resolution. Images at 240-pel are expanded by approximately 66% (1.66 times larger). Creating 144-pel images can improve quality.
3. These AFP impact printers have a print resolution of 144-pel horizontally by 120-pel vertically and do not support 240-pel resolution. Images at 240-pel are expanded by 100% (2.00 times larger) vertically and 66% (1.66 times larger) horizontally. Creating 144-pel images can improve quality.
4. Only OfficeVision/400 graphics are supported.
5. Multiup 2, without rotation, Reduce *TEXT.
6. Multiup 2, Reduce *NONE (commonly called N-up).

8.3 Advanced Function Printing Resources

This section discusses the resources used to perform Advanced Function Printing (AFP). AFP resources are only used with IPDS printers configured with the parameter AFP set to **YES* in the printer device description. You do not need to have Advanced Function Printing Utilities/400 Version 3 (5763-AF1) installed in order to use AFP resources. AFP support is provided by Print Services Facility/400 (PSF/400) which is a chargeable feature of Version 3.0 Release 1.0.

AFP has the following resources:

- Form definition
- Overlay
- Page segment
- Font
- Page definition

Some of the resources are shipped with PSF/400, and others can be created with Advanced Function Printing Utilities/400 Version 3 (5763-AF1). In addition, you can download resources from a System/370, or upload resources from a personal computer (PC).

Resources downloaded from a S/370 or uploaded from a PC must be converted to AS/400 objects. You must receive the resource into a database file member and then transform the data to a format that can be used on the AS/400. You do that by using one of the following commands, which are part of OS/400:

CRTFORMDF Create form definition

CRTOVL Create overlay

CRTPAGSEG Create page segment

CRTFNTRSC Create font resources

CRTPAGDFN Create page definition

Note: If you use the Type Transformer from Print Services Facility/2 (PSF/2) to transfer a font resource to the AS/400, the font is transformed into an AS/400 object and sent to a resource library. For detailed information on PSF/2 Type Transformer refer to the redbook *AS/400 Printing III*, GG24-4028.

Not all resources are used, or can be used, with native AS/400 applications. For example, page definitions can only be referenced with PrintManager/400 or in spooled files downloaded from a System/370.

8.3.1 Form Definition

A Form Definition, which has an object type of **FORMDF* on the AS/400, defines the position of the logical page on a form (physical page), and contains information about the presentation, direction, bin selection and duplexing. Form definitions can be:

- Provided by OS/400 in library QSYS
- Downloaded from a S/370
- Placed inline to the AFPDS file sent to the AS/400
- Uploaded from a PC

The form definitions shipped with OS/400 cannot be modified on the AS/400 or on a S/370. The form definitions created on S/370 and downloaded to the AS/400 cannot be altered on the AS/400. If changes need to be performed, the S/370 site must be notified.

Form definitions are not used with AS/400 native print output. The AS/400 uses the parameters from the printer file associated with the print job. The only exception is when using the Advanced Function Printing Utilities/400 Version 3 (5763-AF1) to print overlays and page segments, or when using the Print Format Utility (PFU).

Warning:

Output positioning from Advanced Function Printing Utilities/400 Version 3 (5763-AF1) is based on the form definition referenced in the printer device description. For this reason an overlay printed from Advanced Function Printing Utilities/400 Version 3 (5763-AF1) can be positioned differently than one referenced from a printer file. For more detailed information refer to the redbook *AS/400 Printing III*, GG24-4028.

Form definitions are used with spooled files downloaded from the S/370 which are in AFPDS or AFPDSLINE format, and with the PRTAFPDTA command. You can also reference form definitions with the PrintManager/400 APIs. Lastly, spooled files uploaded to the AS/400 using Client Access/400 virtual print with data type 5 (AFPDS data) can reference form definitions.

The form definitions shipped with OS/400 are documented in Chapter 13 of the *AS/400 Printer Device Programming - Version 3*, SC41-3713.

8.3.2 Overlay

An overlay, which has an object type of **OVL* on the AS/400, is a collection of predefined data (such as lines, boxes, text, shading, or logos) which can be merged with variable data from an application at print time. Overlays can be:

- Created by Advanced Function Printing Utilities/400 Version 3 (5763-AF1).
- Downloaded from a S/370
- Uploaded from a PC

You cannot modify downloaded (from a S/370) or uploaded (from a PC) overlays with Advanced Function Printing Utilities/400 Version 3 (5763-AF1).

You can use overlays with your applications in the following ways:

- Specify an overlay name in the FRONTOVL (front side overlay) and/or in the BACKOVL (back side overlay, if duplex) parameters of a printer file. You can use the CRTPRTF (Create Printer File), the CHGPRTF (Change Printer File), the OVRPRTF (Override Printer File), or the CHGSPLFA (Change Spooled File Attributes) commands to specify an overlay name in the printer file.

  If you specify the name of the overlay on the FRONTOVL parameter the same overlay will be printed on every page of the print job. If you use duplex printing the overlay on the back side can be different from the one on the front side, but every page in the print job will have the same overlay on each front side, and the same on each back side.

  An enhancement is now available to allow one overlay to be specified for the first page, and a second overlay to be specified for all subsequent pages. This enhancement is discussed in detail in 5.1, “First/Following Pages Overlay Enhancement” on page 103.

  Overlays can only be used if the printer device type parameter (DEVTYPE) in the printer file is set to one of the following values:

  – *SCS
  – *IPDS
  – *AFPDS

  Overlays cannot be used if the printer device type parameter (DEVTYPE) in the printer file is set to **USERASCII*.

  You can also use overlays with OfficeVision/400 output. The printer file used with OfficeVision/400 is specified from the print options panel. By default OfficeVision/400 uses the printer file QSYSPRT in library QSYS. It is recommended that you create a new printer file based on QSYSPRT for each overlay used with OfficeVision/400 documents.

  Note: With OfficeVision/400 you cannot use the commands OVRPRTF to specify an overlay name.

- You can specify an overlay with the DDS (Data Description Specifications) keyword OVERLAY. This allows you to use up to ten overlays on a page, and to change the overlay based on predefined conditions.

  You can use the OVERLAY keyword only if the printer device type (DEVTYPE) parameter in the printer file is set to **AFPDS*. For detail about the new facilities available in Version 3.0 Release 1.0 when using the OVERLAY keyword, refer to 4.2.1, “OVERLAY DDS Keyword” on page 101.

- An overlay can also be referenced by the Print Format Utility (PFU) function of Advanced Function Printing Utilities/400 Version 3 (5763-AF1). For more detailed information refer to the *AFP Utilities/400 - Version 3*, SC41-3640.

Note: The IBM AFP printer drivers for OS/2 and Microsoft Windows can be used to create overlays. Refer to the redbook *AS/400 Printing III*, GG24-4028 for more information on these drivers and how to use them.

8.3.3 Page Segment

A page segment, which has an object type of **PAGSEG* on the AS/400, is an object containing composed text and image that is prepared before formatting and included during printing. Page segments can be:

- Created by Advanced Function Printing Utilities/400 Version 3 (5763-AF1)
- Downloaded from a S/370
- Uploaded from a PC

Page segments can be used by applications in the following ways:

- Page segments can be referenced in an overlay. In this case, refer to 8.3.2, “Overlay” on page 201.
- You can specify a page segment with the DDS (Data Description Specifications) keyword PAGSEG. This allows you to include up to ten page segments per page in your applications.

  You can use the keyword PAGSEG only if the Printer device type (DEVTYPE) parameter in the printer file is set to **AFPDS*. For information on the changes to the PAGSEG keyword in Version 3.0 Release 1.0 refer to 4.2.2, “PAGSEG DDS Keyword” on page 102.
- Page segments can also be referenced by the Print Format Utility (PFU) part of Advanced Function Printing Utilities/400 Version 3 (5763-AF1). For detailed information refer to the *AFP Utilities/400 - Version 3*, SC41-3640.

Notes:

1. Page segments can be created from IM1 image or from IO1 image. IO1 is part of the Image Object Content Architecture (IOCA). IOCA was previously sometimes referred to as IMDS (Image Data Stream).
2. Advanced Function Printing Utilities/400 Version 3 (5763-AF1) can only create page segments from IOCA image.
3. Not all IPDS printers support IOCA image format. Refer to Table 11 on page 193, Table 12 on page 194, and Table 13 on page 198 for more information.
4. The IBM AFP printer drivers for OS/2 and Microsoft Windows can be used to create page segments. See the redbook *AS/400 Printing III*, GG24-4028 for more information on these drivers and how to use them.

8.3.4 Page Definition

A page definition, which has an object type of **PAGDFN* on the AS/400, is a resource that formats and composes pages of line data. Page definitions are not used with AS/400 native applications. AS/400 uses the DDS information to format line data on the page. Page definitions can be:

- Provided by OS/400 in library QSYS

- Downloaded from a S/370
- Uploaded from a PC

The page definitions provided by OS/400 cannot be modified on the AS/400 or on a S/370. The page definitions created on a S/370 and downloaded to the AS/400 cannot be altered on the AS/400. If changes need to be performed, the S/370 site must be notified.

Page definitions are used with spooled files downloaded from a S/370 which are in AFPDSLINE format. You can also reference page definitions with the PrintManager/400 APIs.

The page definitions shipped with OS/400 are documented in Chapter 13 of the *AS/400 Printer Device Programming - Version 3*, SC41-3713.

8.3.5 Fonts

At least two resources are needed to make up a font: a font character set and a code page. A third resource, a coded font, can reference a font character set and a code page together. On the AS/400 the font object types are:

- *FNTRSC and attribute FNTCHRSET, for a character set
- *FNTRSC and attribute CDEPAG, for a code page
- *FNTRSC and attribute CDEFNT, for a coded font

Fonts can be:

- Provided in OS/400 in library QFNTCPL. The fonts included in library QFNTCPL are IBM-supplied compatibility fonts, which are nearly the same fonts as those available on the IBM 3816. The font character sets in library QFNTCPL are 240-pel fonts and cannot be downloaded to an IBM 4028, 3912, 3916 or 3935 printer.
- Provided by licensed program 5738-FNT. This licensed program contains 15 font families. Each family can be individually purchased and is stored in a different library (libraries QFNT01 to QFNT15). The font character sets included in these libraries are 240-pel fonts. They also cannot be downloaded to an IBM 4028, 3912, 3916 or 3935 printer.
- Provided by the PRPQ 5799-FDK. This PRPQ contains the IBM Core Interchange Fonts in both 240 and 300 DPI. This PRPQ also contains the 300-pel form of the fonts shipped with OS/400 in library QFNTCPL.

  Note: The IBM AFP Font Collection for IBM Operating Systems (Announcement ZP94-0759) will replace the Core Interchange PRPQ in March, 1995.
- Downloaded from a S/370. In this case you should check your licensing agreements to see if they preclude the transfer of printer resources between systems. Print Services Facility/370 (PSF/370) includes a conversion program to transform the 240-pel character sets to 300-pel character sets. The character sets in 300-pel can be used by an IBM 4028, 3912, 3916 or 3935 printer.
- Uploaded from Print Services Facility/2 (PSF/2). The fonts are created using the Type Transformer function of PSF/2. Font character sets can be uploaded in either 240-pel or 300-pel. If you use the Type Transformer to transfer a font resource to the AS/400, the font is transformed to an AS/400

object and placed into a resource library. For more detailed information on the PSF/2 Type Transformer refer to the redbook *AS/400 Printing III*, GG24-4028.

- Purchased from third-party vendors. Some vendors can construct special character sets according to your specifications.

Note: 240-pel and 300-pel character sets can have the same name, so they should always be stored in different libraries.

You can refer to an AFP font resource only if the printer device type (DEVTYPE) parameter in the printer file is set to **AFPDS*. AFP fonts can be used in your applications in the following ways:

- You can specify a coded font name in the parameter CDEFNT of the printer file. This allows you to reference a character set and a code page.
- You can specify a character set and a code page in the parameter FNTCHRSET of the printer file.
- If you are using a double-byte character set (DBCS), you can specify a coded font name in the parameter IGCCDEFNT of the printer file. For more information about using DBCS, refer to Chapter 9, “Double Byte Character Set Printing” on page 207. The coded font will reference a character set and a code page.
- You can specify a coded font name with the DDS (Data Description Specifications) keyword CDEFNT. This allows you to reference a code page and a character set for printing a named or constant field, or fields within a record.
- You can specify a character set with the DDS keyword FNTCHRSET. This keyword allows you to specify a character set and a code page for printing a named or constant field or field within a record.
- If you are using DBCS fonts, you can use the DDS keyword IGCCDEFNT. This keyword allows you to specify a coded font to reference a DBCS character set and code page. For more information about using DBCS, refer to Chapter 9, “Double Byte Character Set Printing” on page 207.

Note: If your printer does not have internal fonts (for example, the IBM 382X, 3835, and 3900), the fonts must always be downloaded in order to print output from any application. All referenced font global identifiers (FGIDs) are replaced by character set and code page names and downloaded to the printer.

For more detailed information on AS/400 fonts, please refer to the redbook *AS/400 Printing III*, GG24-4028.

8.4 Additional Documentation

You can find additional information in the following publications:

- *AS/400 Printer Device Programming - Version 3*, SC41-3713
- *AS/400 DDS Reference - Version 3*, SC41-3712
- *AFP Utilities/400 - Version 3*, SC41-3640
- *Advanced Function Printing: Printer Information*, G544-3290
- *AFP Print Services Facility/2: Type Transformer User's Guide*, G544-3796
- *AS/400 Printing II*, GG24-3704

- *AS/400 Printing III*, GG24-4028

Chapter 9. Double Byte Character Set Printing

The AS/400 system supports multiple national languages including what are known as “writing scheme languages.” For writing scheme languages, such as Traditional Chinese, Japanese, Simplified Chinese and Korean, the AS/400 uses two bytes to represent characters used in these languages. These are what we called **Double-Byte Character Set (DBCS)** languages.

Most phonetic languages, such as English, are derived from Latin or Greek. In addition to sharing many common root words, every word can be expressed using a limited number of alphabetic characters. From the perspective of computer processing, these languages are relatively simple to handle, since the total number of characters (alphanumerics and symbols) are less than 256 and a character can be expressed in a single byte. These languages are called **Single-Byte Character Set (SBCS)** languages. In addition, the characters themselves are relatively simple and can be represented with good legibility on display formats which have dot matrices of between 8 x 8 and 9 x 14 character resolution.

Most Asian DBCS languages have evolved in a different way and are generally derived from Chinese. They are written with a system based on ideographic symbols which represent things, ideas or objects rather than combinations of letters from an alphabet. An ancient Chinese dictionary contained almost 250,000 different characters. Modern Asian languages use considerably fewer characters, for example about 8,000 characters for Japanese and Korean and about 14,000 characters for Traditional Chinese. One-byte addressing (SBCS) only allows 256 different characters to be represented, which is not enough to represent all of the characters needed by these writing scheme languages. That is why the AS/400 and other computer systems need two bytes to express a character in a writing scheme language. These languages have therefore come to be known as DBCS languages.

In addition to the large quantity of DBCS characters, the characters themselves are much more complex than alphabetic characters and require higher resolution to represent the characters legibly. The minimum resolution is 16 x 16 but more commonly 24 x 24 is used to provide a high quality display format.

Let us consider the differences between SBCS and DBCS languages in a little more detail. A word in a SBCS language is spelled using characters from the alphabet for that language, but a DBCS word has a unique single character to represent it.

Consider the example shown in Table 14. In English, the word HORSE is made up of five letters from the English alphabet of 26 letters. However, in a DBCS language like Chinese, a horse is depicted by a single unique character, which is more like a “picture” than a string of characters:

Table 14 (Page 1 of 2). SBCS vs. DBCS Example

	SBCS (English)	**DBCS (Chinese)**
Word	HORSE	馬
Character	H O R S E	馬

Table 14 (Page 2 of 2). SBCS vs. DBCS Example		
Font	HORSE	馬
AS/400 Hexadecimal code	X'C8 D6 D9 E2 C5'	X'568C'
PC Hexadecimal code	X'48 4F 52 53 45'	X'968B'

Although these DBCS characters are stored as a two-byte binary code, the AS/400 and PCs use different DBCS code schemes. The AS/400 uses EBCDIC, while the PC uses ASCII. Therefore one DBCS character is stored as a different code on each system. DBCS code conversion is required to maintain the meaning of the DBCS data when sending a file from one system to another. The DBCS code conversion can be done on either the AS/400 or the PC. Because the code conversion has to be able to convert a mixture of DBCS and SBCS in one data stream, it requires a special system program or routine to handle the conversion. For example, PC Support/400 for DOS DBCS provides an extra program called PCSXLT.EXE to handle the DBCS code conversion on the PC.

The double-byte character set fundamentals are described in detail in Appendix F of the manual *AS/400 Printer Device Programming - Version 3*, SC41-3713.

In this chapter we will try to provide a brief discussion about DBCS as it relates to printing from the AS/400. We will explore the following:

- DBCS environments
- AS/400 DBCS enabling
- DBCS printers
- How to print DBCS data
- DBCS licensed programs and utilities
- Special consideration for DBCS printing

9.1 DBCS Environment

The printing of double-byte characters requires an environment which supports DBCS. This environment includes system hardware, system software, peripherals and so on. All AS/400 models can support DBCS if OS/400 is installed with a DBCS language feature.

DBCS display stations and printers are required to handle the input and output of double-byte characters. These terminals and printers could be DBCS unique devices or common devices running DBCS enabling software. For example, the IBM 5417 Impact Line DBCS Printer is a specific DBCS printer, while the IBM 3930 Page Printer is a common IPDS printer which can be enabled for DBCS printing with the addition of an optional feature.

Due to the large quantity of DBCS characters required to display and print DBCS, input and output devices must have the capability to handle the very large character sets which contain the ideographic characters.

9.1.1 DBCS Character Input

DBCS characters can be entered via a DBCS terminal or a DBCS capable PC. There are so many characters in DBCS languages that it is not possible to map all DBCS characters onto a keyboard. Different languages have a variety of methods for inputting characters. If we consider Chinese, there are two groups of input methods which are generally used.

Pronunciation A DBCS keyboard will contain keys depicting the pronunciation of the sounds. For example, in Chinese there are 37 different phonetic signs, and each phonetic sign has a key to depict it. So by pressing these keys you can “speak” the word to the computer. There will be many characters with a similar pronunciation, but the screen will now show you a list of characters, and you are able to choose the one you want.

Component Parts DBCS characters can usually be broken down into very simple component parts, and again these component parts can be depicted on the keyboard. So by pressing all (or some) of the keys showing the component parts, the computer is able to display a list of characters matching your requirements, and you are able to select the correct character. The more component parts you specify, the fewer choices of characters in the list of possible matches.

These input methods can also use an SBCS keyboard. The functions are mapped onto various key combinations.

9.1.2 DBCS Character Output

DBCS character output can be printed via a DBCS capable printer or displayed via a DBCS supported terminal. Generally, the device has to hold all of the bit patterns for the complete DBCS character font.

In a single-byte language many different fonts are available with which to depict the alphanumeric characters, for example different typefaces (Courier, Helvetica, etc.), typestyles (italic, bold, etc.) and so on. Different fonts also exist for a DBCS language, but are not used in the same way. A high resolution terminal or printer would use a different writing style (font) to depict the characters than a lower resolution device. Since a double-byte character set requires a great deal of memory it is common that a specific device will only be able to use a single font.

Table 15 (Page 1 of 2). Hardware for DBCS Processing

System	Component	Model for DBCS Data Processing
AS/400	System Unit	All models[1]
	Terminal	DBCS non-programmable terminal DBCS 5250 emulation on PC
	Printer	DBCS SCS printers AFP Printers with DBCS support

Table 15 (Page 2 of 2). Hardware for DBCS Processing		
PC	System Unit	DBCS model (PS/55) PS/2[2] PS/VP[2]
	Display	DBCS display (PS/55) Common VGA display
	Printer	DBCS model (PS/55) Common model[2]

Note:

1. With OS/400 DBCS language feature installed as a primary language.
2. Executed under DOS/V, Windows** DBCS version, OS/2 DBCS version.
3. Supported by DBCS versions of DOS, Windows, and OS/2.

Table 15 on page 209 shows the basic hardware requirements for handling DBCS I/O on an AS/400 and a PC.

Note: For a list of AFP printers that support DBCS printing, refer to Table 11 on page 193 and Table 12 on page 194.

9.2 AS/400 DBCS Enabling

Before you can start to use DBCS data, the AS/400 must have one of the DBCS language features installed. DBCS device support does not exist until the DBCS language feature is installed.

One of the following DBCS National Language Versions (NLV) has to be installed as the primary language.

2938 English Uppercase DBCS

2962 Japanese Kanji DBCS

2984 English Upper/Lowercase DBCS

2986 Korean DBCS

2987 Traditional Chinese DBCS

2989 Simplified Chinese DBCS (People's Republic of China)

You may have more than one secondary language installed. This may include any DBCS and SBCS NLVs. In other words, you are able to have both SBCS and DBCS NLVs installed on one AS/400.

The language feature named for an individual language, for example feature 2989 (Simplified Chinese), only contains DBCS character fonts and tables for that language. The language feature will also provide system panels and system messages using DBCS characters.

If you want to enable DBCS on an AS/400 without specifying a particular DBCS language, feature 2984 can be installed as the primary language. This feature will provide upper and lower case English with DBCS support enabled for any of the DBCS languages. We recommended that you use English Uppercase (feature 2938) with Japanese.

The AS/400 uses an extended form of EBCDIC to define double-byte characters. This extension uses two control characters, SO (shift-out: X'0E') and SI (shift-in:

X′0F′) to distinguish between DBCS and SBCS in a data stream containing a mixture of double-byte and single-byte characters. Each control code occupies one byte of storage in the AS/400, in a display buffer or in a printer buffer.

In an SBCS language, new objects or ideas cause new words to be used to represent them. For SBCS languages, the new word is still spelled using existing alphabetic characters. In a DBCS language however, completely new characters have to be created to convey new objects, meanings or ideas. For a newly created DBCS character which is not part of the existing DBCS character set, the AS/400 will put the two-byte code into a predefined area called the **User-defined code area**. These newly created DBCS characters are called **User-defined characters**.

DBCS characters contained in the character set for a terminal or printer are called **Basic characters**. **Extended characters** are those characters which devices can not display or print without assistance from the system. Extended characters comprise existing characters not included in the device character set as well as user-defined characters.

The **last code point** is the code point used to distinguish basic characters from extended characters for each terminal or printer. This value, which usually differs for each device, defines the highest code point that has a character defined for it in the character set contained in the device. The AS/400 uses the last code point to determine whether to use a character from the character set within the device or to download a character from the extended characters held on the AS/400.

The IGC Feature (IGCFEAT) is the parameter used for DBCS terminals or DBCS printers to specify the last code point in each DBCS font table. Figure 85 on page 212 is the panel for the CRTDEVPRT command. This example specifies the last code point for a Japanese 5327 printer. When you use a DBCS character whose two-byte code is lower than the last code point, the two-byte DBCS code will be treated as a basic character and the system will send the two-byte code to the device. When you use a DBCS character whose two-byte code is higher than the last code point, the AS/400 will treat it as an extended character. If the printer file parameter IGCEXTCHR is set to *YES, the extended character will be downloaded to the printer. If the value is *NO then the two-byte code is sent to the printer. If you have specified the last code point correctly for the printer, no character pattern exists at this code point and the printer will print the undefined character. It is possible that you have set the last code point too low, and a character does exist in the printer for this code point. If that is so then the printer will print the character correctly.

```
                    Create Device Desc (Printer) (CRTDEVPRT)

Type choices, press Enter.

Device description . . . . . . . DEVD        > DBCSPRT
Device class . . . . . . . . . . DEVCLS      > *LCL
Device type  . . . . . . . . . . TYPE        > 5553
Device model . . . . . . . . . . MODEL       > B01

DBCS feature:                    IGCFEAT
  Device features  . . . . . . .             > 2424JC2
  Last code point  . . . . . . .             > 68FE
Text 'description' . . . . . . . TEXT          5327 001 Japanese Printer


                                                                    Bottom
F3=Exit   F4=Prompt   F5=Refresh   F10=Additional parameters   F12=Cancel
F13=How to use this display        F24=More keys
```

Figure 85. CRTDEVPRT Display Showing IGCFEAT

For the IGCFEAT value for DBCS printers and terminals, please refer to *CL Reference*, SC41-3722.

9.3 DBCS Printing Process

DBCS printing is only a part of the whole AS/400 printing function. The AS/400 printing process is described in the manual *AS/400 Printer Device Programming - Version 3*, SC41-3713 and also in the redbook *AS/400 Printing III*, GG24-4028.

In order to show the differences between the full AS/400 printing process, and those parts which apply to printing double-byte characters, Figure 86 on page 214 shows the whole AS/400 printing process. This figure is taken from the redbook *AS/400 Printing III*, GG24-4028.

Figure 87 on page 215 shows the printing process specifically for a double-byte character set.

In the DBCS printing process the printer writer will direct the DBCS spooled file according to the type of printer selected. This DBCS printer can be:

1. An SCS printer configured as an IBM 5553 or 5583 DBCS printer.
2. An ASCII printer attached to a DBCS terminal or a PC running DBCS emulation.
3. An IPDS printer configured with AFP set to *YES.

Depending on which printer type is configured, the following actions will occur:

1. **An SCS Printer:**

   With option 1, the SCS spooled file has the attribute IGCDTA(*YES) to identify the spooled file contains DBCS data. This attribute is set in the printer file. The spooled file is directed to the Print Function Manager and then to the printer.

2. **An ASCII Printer:**

   With option 2, the SCS spooled file has the attribute IGCDTA(*YES) to identify the spooled file contains DBCS data and the SCS spooled file will be

translated to ASCII by the DBCS terminal to which the printer is attached, or the DBCS emulation program if the printer is attached to a PC. In addition, an ASCII spooled file can be built by the application. In this case the device type of the spooled file would be *USERASCII. This spooled file can be sent to an ASCII printer attached to any DBCS terminal or PC running a DBCS emulation program which provides ASCII transparency.

3. **An IPDS Printer (AFP *YES):**

   With option 3, the spooled file can be SCS, AFPDS, LINE or AFPDSLINE. LINE and AFPDSLINE data streams cannot be generated on the AS/400, but are supported for spooled files sent to the AS/400 from an MVS or VM system. An SCS spooled file is converted to AFPDS by the data converter and sent to PSF/400 where it is converted to full IPDS. PSF/400 manages the downloading of the AFP DBCS font to the printer together with any other AFP resources which are required.

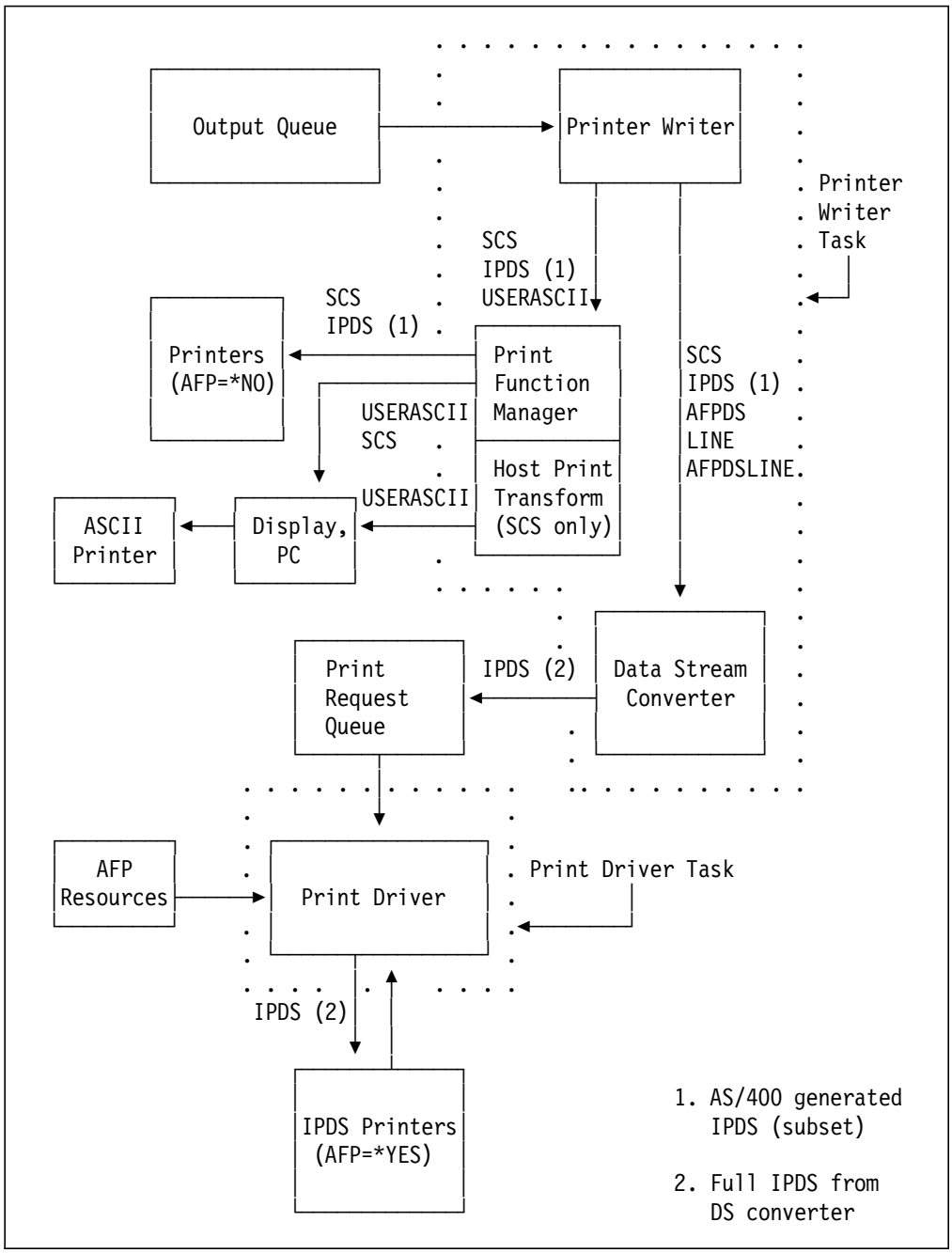

Figure 86. AS/400 Printing Process

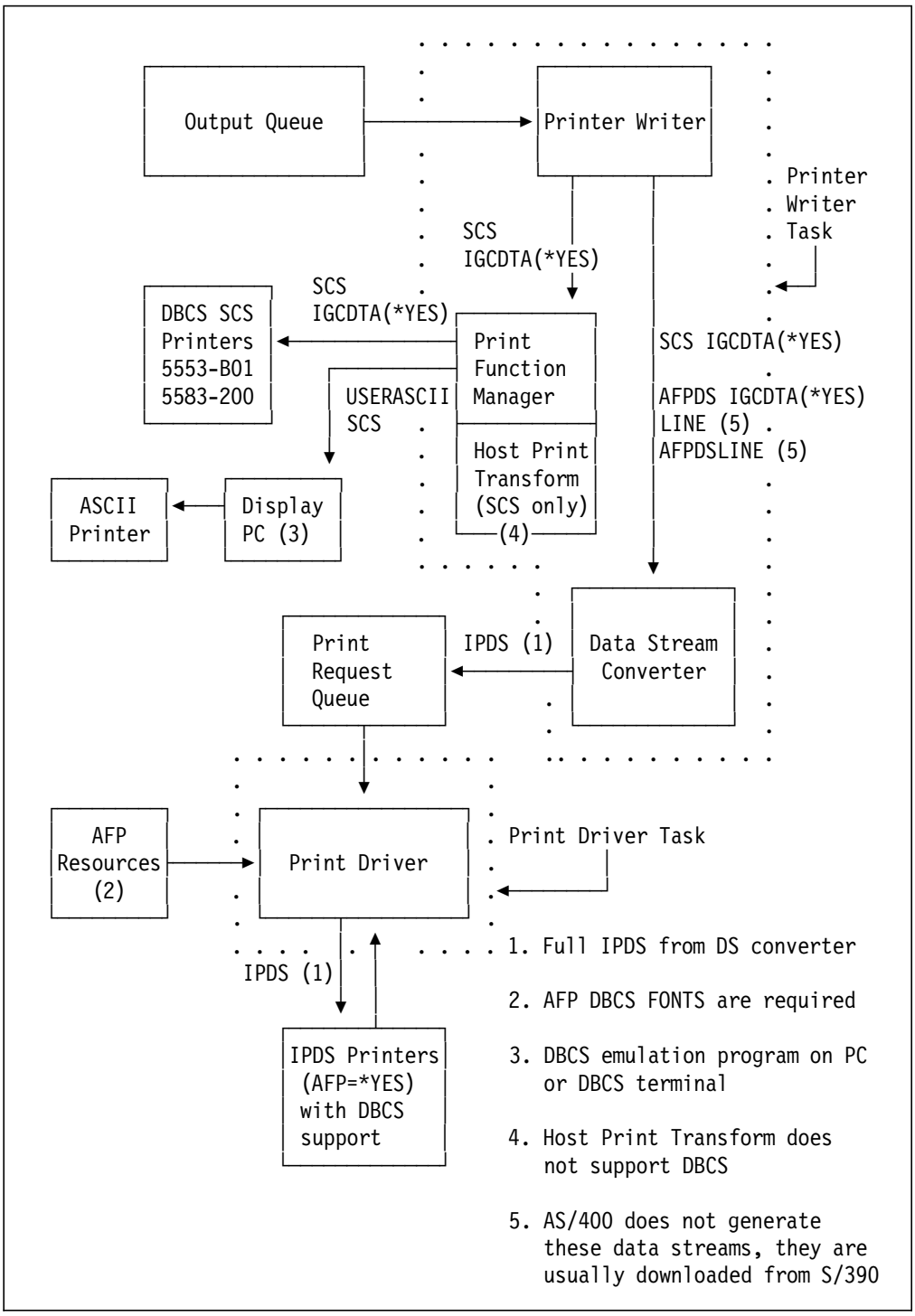

Figure 87. AS/400 Printing Process with DBCS Support

In addition to the data stream having the capability to handle SO/SI mixed DBCS control characters, DBCS character font handing is a unique process for DBCS printing.

DBCS SCS printers may use a resident DBCS character font, an AS/400 resident font table, or DBCS fonts provided by emulation programs. IBM-supplied AS/400 DBCS font tables are provided with the AS/400 DBCS NLVs as follows:

QIGC2424 24X24 Japanese characters

QIGC2424C 24X24 Traditional Chinese characters

QIGC2424K 24X24 Korean characters

QIGC2424S 24X24 Simplified Chinese characters

QIGC3232 32X32 Japanese characters

QIGC3232C 32X32 Simplified Chinese characters

Note: These tables include IBM-supplied fonts and allow user-defined characters.

Other DBCS character fonts are supplied with the AS/400 AFP DBCS Fonts licensed program (5763-FN1). They are used for high function IPDS AFP(*YES) printers. user-defined characters can not be appended to these fonts. For an AFP DBCS font catalog, please refer to the following manuals.

- *Advanced Function Printing: Korean Font Catalog*, SB09-1421
- *Advanced Function Printing: Traditional Chinese Font Catalog*, SC18-0124
- *Advanced Function Printing: Simplified Chinese Font Catalog*, SC18-0133
- *Advanced Function Printing: Japanese Font Catalog*, SC18-2332

Figure 88 on page 217 shows how a DBCS font will be used in different situations.

1 SCS twinax attached printers:

SCS twinax attached printers use a resident font to print basic characters and download extended characters from the AS/400 DBCS Font Table.

2 AFP printers:

The whole set of AFP DBCS characters will be downloaded to AFP printers when a DBCS coded font is specified in the printer file.

3 PC printers without a resident font:

PC printers use a PC DBCS font from the PC to print DBCS data.

4 PC printers with a resident font:

PC printers use a resident font for basic characters and user-defined characters from the PC for extended characters.

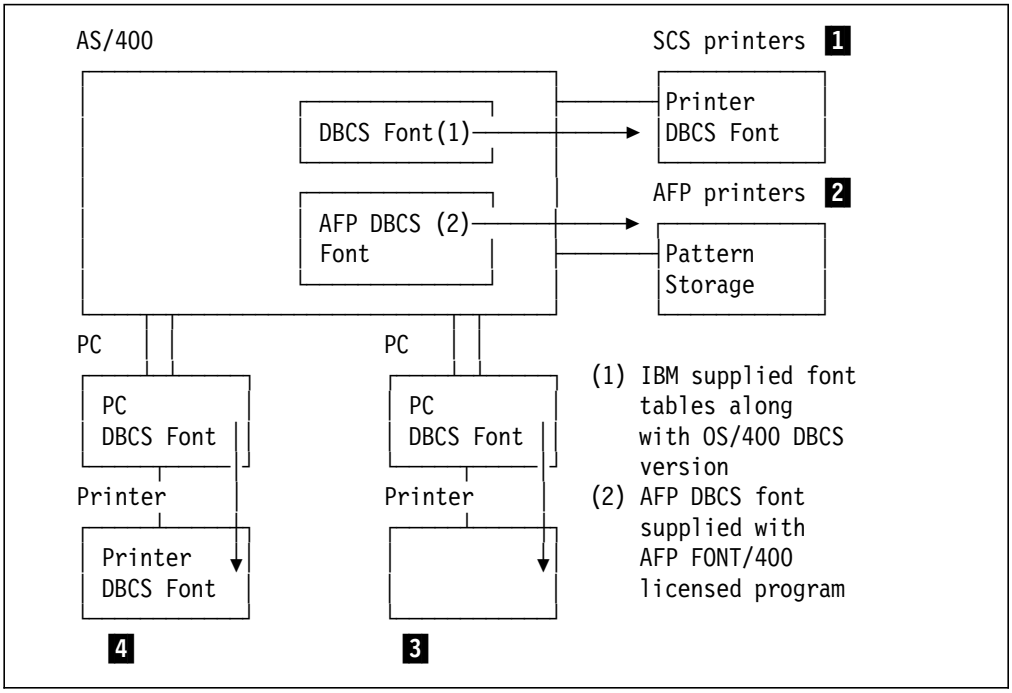

Figure 88. Fonts for DBCS Printing

There are many IBM IPDS printers, IBM DBCS line printers, IBM Personal System/55 printers and DBCS 5250 emulation program supported PC printers which can be attached to the AS/400. Except for high function IPDS printers, most of the AS/400 DBCS printers use the SNA Character String (SCS) print data stream. These SCS printers emulate IBM 5553 SCS line printers or IBM 5583 SCS page printers on the AS/400. The common methods of attaching DBCS SCS printers to the AS/400 are directly to a workstation controller, via a remote controller, via an IBM DBCS display station, and via a DBCS enabled PC. We will cover each of these attachment methods in the following sections.

9.3.1 Printers Attached Directly to the Workstation Controller

Several IBM DBCS printers can be attached to an AS/400 workstation controller or remote controller by twinax cable. These IBM DBCS twinax attached printers are usually defined as high speed DBCS system printers. Currently, the IBM 3930 is the only twinax attached IPDS printer that supports DBCS.

The most common DBCS twinax attached SCS line printers are the IBM 5x27 family of printers. Table 16 shows specifications of IBM 5x27 DBCS SCS twinax attached printers. The IBM 5427 is a follow-on product to the IBM 5327 and IBM 5227 DBCS printers, with a faster print speed, while the IBM 5417 is a follow-on product to the IBM 5327 and IBM 5227, supporting the new Advanced Print Writer (APW) function of Version 3.0 Release 1.0.

Table 16 (Page 1 of 2). DBCS SCS Impact Line Printers

Printer		**5227**	**5327**	**5427**	**5417**
DBCS Printing Speed (lpm) [1]	NLQ	180	330	500	330
	DP	N/A	N/A	N/A	430
	Draft	N/A	N/A	N/A	500

Table 16 (Page 2 of 2). DBCS SCS Impact Line Printers					
SBCS Printing Speed (lpm) [2]	NLQ	230	430	640	330
	DP	N/A	N/A	N/A	430
	Draft	N/A	N/A	N/A	500
Form size (Inch)	Width	5.0-15.0	5.0-16.0	5.0-16.0	3.5-15.0
	Length	8.0-11.0	8.0-12.0	8.0-14.0	8.0-12.0
Resolution		180 pel x 180 pel			
DBCS Font Rotation (90 degree counter clockwise)		Y	Y	Y	Y
Print Span (Inch)		13.2 13.6 [3]	13.6	13.6	13.6
Max. Number of copy		Original + 4	Original + 4	Original + 4	Original + 7
Twinaxial attachment		Y	Y	Y	Y
Models [4]		001/002 /003/005	001/002 /003	001/002 /003/005	001/002 /003/005
Functions From APW V3R1 [5]					
Barcode printing [6]		N	N	N	Y
OCR-B		N	N	N	Y
240-pel symbol		N	N	N	Y
Max font magnification		2H x 1V	2H x 2V	2H x 2V	4H x 4V

Note:

1. This speed assumes a 24 x 24 DBCS font is used at 6 CPI printing.
2. This speed assumes a 12 x 18 SBCS font is used at 6 CPI printing.
3. Optional feature.
4. Languages supported by printer model:
   - 001: Japanese
   - 002: Korean
   - 003: Traditional Chinese
   - 005: Simplified Chinese

   These printers are only available in Asia Pacific countries.
5. Please refer to 9.4.3.1, “Advanced DBCS Printer Support/400 (APSU/400)” on page 237 for more details about the Advanced Print Writer (APW) function.
6. APW V3R1 supports CODE 3 of 9, JAN Short (EAN-8), JAN Standard (EAN-13), Industrial 2 of 5, Interleaved 2 of 5, NW7.

Each model of the DBCS SCS printers is designed to support one DBCS language. For example, Korean characters can not be printed from a Chinese twinax attached SCS printer. Some DBCS countries offer various country unique printers to their customers. For detailed information, you will need to refer to the individual sales manual for that country.

Figure 89 on page 219 shows DBCS printing via twinax attached printers. They are configured as an IBM 5553-B01 device type on an AS/400. When an SCS spooled file with either IGCDTA(*YES) or IGCDTA(*NO) is sent to them, they will use their resident font for all the Basic Characters, which includes both DBCS

and SBCS characters. This maximizes the printing speed by minimizing the characters that have to be downloaded to the printer.

The number of characters contained in the resident basic character font varies from printer to printer.

If the required character's pattern is not available in the printer resident font, it will be downloaded from the AS/400 if you have requested the use of DBCS extension characters in the printer file by specifying IGCEXNCHR(*YES).

Note: This parameter does not apply to printers attached to a PC, or via a terminal.

This is the major difference in font support between twinax attached SCS printers and ASCII printers attached to a DBCS terminal or a PC running a DBCS capable emulation program.

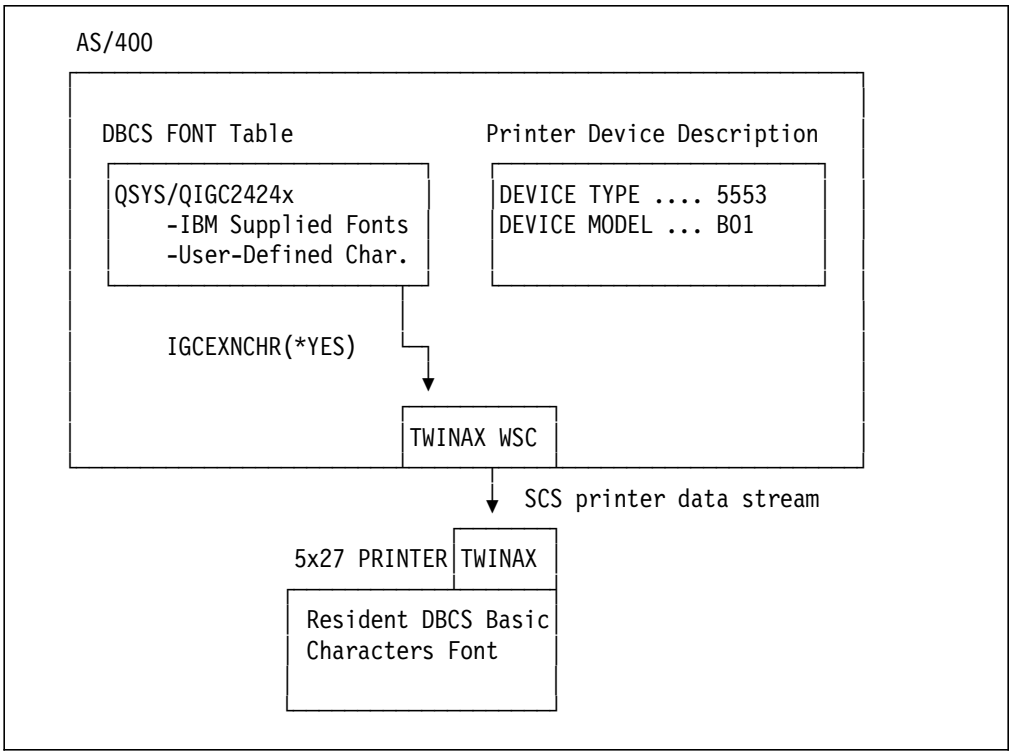

Figure 89. DBCS Printing via Twinax Attached Printers

9.3.2 Printers Attached via a DBCS Enabled PC

Printers attached via DBCS enabled PCs are offered in various choices and combinations. The DBCS printing capability is controlled and provided by the DBCS emulation programs which are executed under the DBCS PC operating system environment.

The AS/400 internal code uses EBCDIC, while the PC uses ASCII. Therefore DBCS emulation programs must convert both printer control codes and double-byte characters from AS/400 format to PC format.

Let's discuss the differences between the DBCS code on the AS/400 and the PC in more detail. We have mentioned at the beginning of this chapter that a DBCS character is stored using two-byte codes in a computer. The two-byte

hexadecimal code for DBCS or one-byte hexadecimal code for SBCS, is called a **code point**. A **code page** is a mapping of character patterns to their code points. Each DBCS or SBCS language character set is assigned a code page with an unique **Coded Character Set Identifier (CCSID)**. The code conversion routines convert from one AS/400 DBCS code page to the equivalent PC code page.

Table 17 shows the equivalent AS/400 and PC code pages for the various DBCS languages. The table shows the CCSID mapping to the DBCS code pages.

However, a "pure" DBCS code page only references a particular DBCS character set with two-byte code points. In many cases, the data will contain mixed DBCS and SBCS characters which are both two-byte code points and one-byte code points mixed. This means we need to use another one-byte code page to handle SBCS characters in a DBCS system. For this reason, some CCSIDs point to two code pages: one for the DBCS two-byte code points, and another for the SBCS one-byte code points. For example Traditional Chinese′s CCSID 00937 is the mixed CCSID which combines code page 00037 which is the US English SBCS code page and code page 00835 which is the Traditional Chinese DBCS code page.

For the Korean language the most popular PC code page is KS code. IBM PCs, however, used to use IBM specific code pages, either 00944 or 00934. The IBM PCs now support the KSC 5601, so the AS/400 00933 will map to the PC KS code page 00949.

There are two different PC code pages in Traditional Chinese. They are IBM 5550 PC code for most of IBM PC products and the BIG-5 PC code which is widely used by other venders. Both 5550′s 00948 code page and BIG-5′s 00950 are supported and map to 00937 on the AS/400.

Table 17. DBCS Code Pages (CCSIDs for Mixed SBCS/DBCS)

Language	**PC**	**AS/400**	**Comments**
Japanese	00942/00932	05035 05026	5035: Latin 5026: Katakana
Korean	00949	00933	944/934 will be replaced by 949 (KSC 5601)
Traditional Chinese	00948/00938 00950	00937	948/938: 5550 code 950: BIG-5 code
Simplified Chinese	01381	00935	946/936 will be replaced by 1381 (GB code)

Many PC printers do not contain DBCS fonts and use DBCS fonts from the PC operating system instead of from the AS/400. The DBCS character fonts for these PC printers are provided by the DBCS terminal or DBCS 5250 emulation programs. DBCS character fonts on PCs or DBCS terminals are put in font files.

A tool called Font Management Aid (FMA) allows you to take PC DBCS fonts from and to the AS/400. This product is very useful to ensure consistency across the IBM PC and AS/400 platforms. For more details on FMA, please refer to 9.4.3.2, "Font Management Aid (FMA)" on page 238.

9.3.2.1 PC Running DOS

In order to enable DBCS printing from a PC, you need a DBCS version of DOS. There are many DBCS versions of IBM DOS for each DBCS language. The latest family of DOS DBCS versions are known as the IBM PC DOS/V family, and are listed below:

- IBM PC DOS J6.x/V Japanese
- IBM PC DOS H6.x/V Korean
- IBM PC DOS T6.x/V Traditional Chinese
- IBM PC DOS P6.x/V Simplified Chinese

The **IBM 5250 Workstation Program (5250WS)** is the latest DOS DBCS 5250 emulation program family. It provides standard support for twinax, token-ring, Ethernet and SDLC attachments. A 5250 device session can be established to a non-adjacent AS/400 via AS/400 APPN** support.

Asynchronous communication is also supported by 5250WS via extra licensed programs. One program called “IBM 5250WS Asynchronous Gateway” runs on a PC server and “IBM 5250WS Asynchronous Remote” runs on the PC clients.

Other DOS DBCS 5250 emulation programs are also available, but they generally provide fewer attachment methods and only support PS/55 hardware with IBM 5575/5577 printer data stream printers.

One 5250 printer emulation is provided by DOS DBCS 5250 emulation programs. PC printers are emulated as an IBM 5553-B01 SCS printer on the AS/400. No other printer type is allowed on the AS/400 device description.

Since SCS is the only host data stream supported, you are not able to print host image or graphics from AS/400. The 5553-B01 only supports a relatively simple SCS printing data stream. Table 18 details the logical support for 5553 printers by the AS/400. However, what is actually supported depends on the physical printer itself.

Table 18. IBM 5553 Printer Device Characteristics

Lines per Page (LPI parameter) [1]						
3 LPI	**4 LPI**	**6 LPI**	**7.5 LPI**	**8 LPI**	**9 LPI**	**12 LPI**
1-255	1-255	1-255	1-255	1-255	N/A	1-255
Characters per Line (CPI parameter) [1]						
	10 CPI	**12 CPI**	**13.3 CPI**	**15 CPI**	**18 CPI**	**20 CPI**
SBCS	1-136	1-163	1-181	1-204	1-244	1-272
DBCS[2]	1-68	1-81	1-90	1-102	1-122	1-136

Note:

1. These are the IBM 5553 printer’s logical characteristics as supported by AS/400. For the actual physical specifications of your printer, you should refer to the manual for your DBCS SCS printer or emulation program.
2. DBCS characters occupy twice a much space as SBCS characters.

5250WS supports many PC printers which could be either IBM 5575/5577 printer data stream printers or **ESC/P** printer data stream printers. 5250WS controls

these printers by means of Printer Function Tables (PFT) which are supplied with the 5250WS licensed programs. The PFTs are supplied with the 5250WS licensed programs. This means that not all DBCS DOS supported printers can be emulated as AS/400 DBCS printers.

ESC/P is the name of a printer data stream owned by the Seiko** Epson company. It is accepted by many PC printer manufacturers and very common in today's PC printer market. This feature provides customers with a wider choice of printers and benefits customers who find it difficult to get a specific DBCS language supported printer. Different DBCS versions of 5250WS have different ESC/P support. For details, please refer to the 5250WS manual for each DBCS version.

Figure 90 on page 223 shows AS/400 DBCS printing via the 5250WS emulation program. The PC printer is automatically or manually configured as a 5553-B01 device type on the AS/400. AS/400 SCS spooled files are sent to the printer in SCS data stream format. The emulation program converts the SCS data stream to an ASCII PC printer data stream using the PFT. SBCS/DBCS mixed data is also converted to PC SBCS/DBCS data at the same time. After this has been done, PC DBCS fonts are used to print the DBCS characters on the printer.

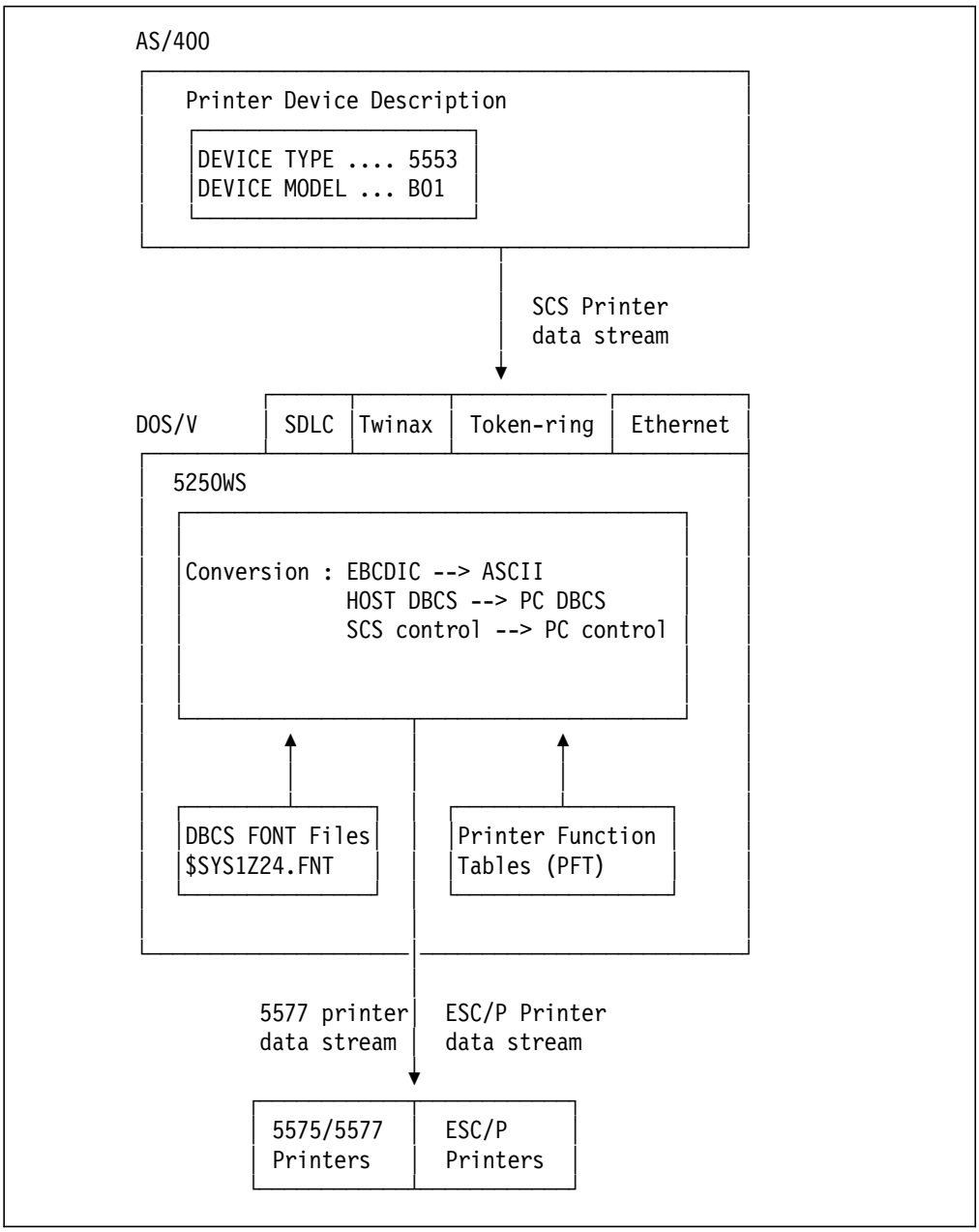

Figure 90. AS/400 DBCS Printing via 5250WS

9.3.2.2 PC Running DOS with Microsoft Windows

Microsoft** provides DBCS enabled Windows 3.1 in a Far-East version series, such as Microsoft Windows** Chinese Version 3.1 which supports Traditional Chinese. When you use these DBCS enabled versions of Windows, the underlying DOS system does not need to have DBCS support. The DBCS enabling functions are supported within the Windows environment itself.

For AS/400 DBCS printing, only Windows DBCS 5250 emulation programs can emulate a PC printer as an AS/400 DBCS printer. The newest Windows DBCS 5250 emulation program is **Personal Communication 5250 (PC/5250)**. There are different PC/5250 versions for each DBCS language which provide twinax, token-ring, Ethernet and SDLC attachment.

PC printers are controlled by PC/5250 through the Windows Print Manager or directly via a Printer Definition Table (PDT). There is no AFP support in the DBCS version of PC/5250. PC/5250 also emulates the PC printer as a 5553-B01 for DBCS printing on the AS/400.

PC/5250 drives PC printers in the following modes:

1. **Windows Graphic Display Interface (GDI) mode**

   In this mode, the Windows Print Manager deals with the printer driver itself. All printers supported by the Microsoft Windows 3.1 Far-East version can be used to emulate an AS/400 DBCS printer. This mode provides flexibility in PC printer selection, although the Windows printer drivers are generally not as configurable as are PFTs and PDTs.

   PC/5250 receives AS/400 print data and converts it to PC format. A PC DBCS character font will be used to convert the data to image. PC/5250 then sends this image to a Windows print queue in Windows Print Manager format. Output is passed to the Windows printing module to print. Because the double-byte characters are printed as images, the traffic between Windows and the printer becomes heavy and printing speeds are slow.

2. **PC/5250′s PDT mode**

   There are some IBM supplied PDT files which can drive PC/5250 printers directly instead of via the Windows Print Manager. In this mode, only the IBM 5577 and 5585 DBCS PC printers, and some ESC/P printers can be used.

   Based on a printer′s capability to intercept DBCS code and print DBCS font characters, PC/5250 receives AS/400 print data and converts it to PC/5250 print data. Two-byte DBCS PC codes will be sent directly to the PC printer. The printer will use resident DBCS font characters where possible and request any extended DBCS font characters which are not available in the resident font from PC/5250.

Figure 91 on page 225 shows AS/400 DBCS printing via a Windows emulation printer. The Windows printer is configured as device type 5553 and model B01 on the AS/400. An AS/400 SCS IGCDTA(*YES) spooled file is sent to the PC/5250 emulation. The emulation programs convert the control codes and the data stream according to the printer session setting. If GDI mode is set, Windows DBCS fonts will be used for DBCS data and the converted data will be sent to Windows Print Manager as an image. Otherwise, PC/5250 will convert SBCS/DBCS data to PC format and send the DBCS two-byte codes with the PC printer control codes to the printer using the PDT.

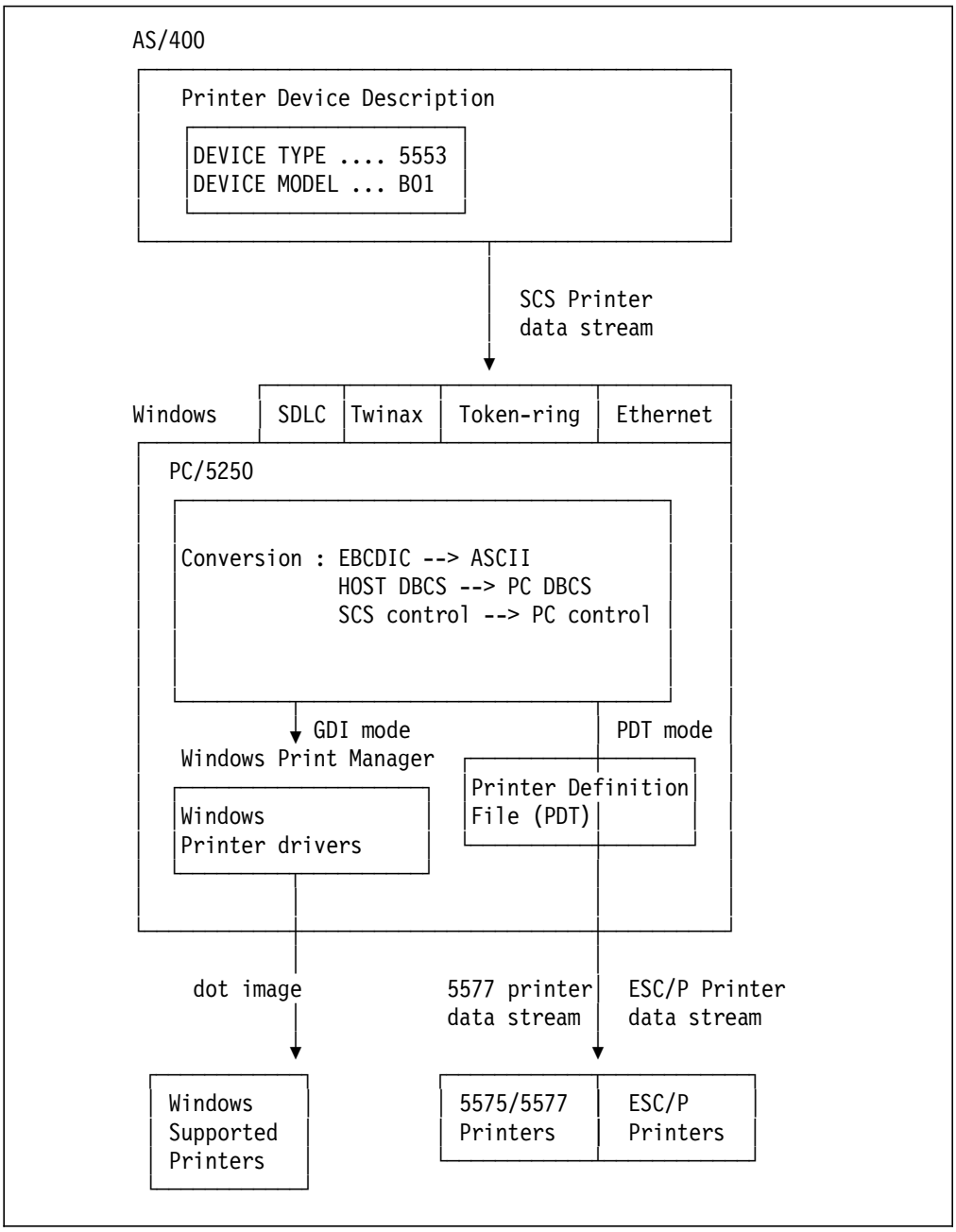

Figure 91. AS/400 DBCS Printing via PC/5250

9.3.2.3 PC Running OS/2

IBM provides DBCS versions of OS/2 to enable PS/2, PS/VP, PC/AT* compatible and PS/55 systems to support DBCS. Communication Manager/2 (CM/2) is the licensed program on OS/2 to provide 5250 Work Station Feature (WSF). 5250 printer emulation is part of 5250 WSF. Printers attached to DBCS OS/2 Print Manager can be configured as an AS/400 DBCS printer via CM/2. With CM/2 V1.1, DBCS and SBCS support are contained within a single product.

CM/2 communicates with the AS/400 via APPC sessions which support twinax, token-ring, Ethernet and SDLC attachment. A 5250 printer session can be established to a non-adjacent AS/400 via AS/400 APPN support.

The 5250 printer session of CM/2 receives AS/400 DBCS print data and converts it using the DBCS OS/2 system routines. OS/2 code conversion is done using the code page specified in the OS/2 configuration file. The output is passed to the OS/2 Print Manager where control features such as the use of OS/2 DBCS Adobe Type Manager** (ATM**) outline fonts can be exploited.

For the mixed SBCS and DBCS CCSIDs, please refer to Table 17 on page 220. The DBCS code pages referred to in that table are the latest supported but some existing products only support old code pages.

Figure 92 on page 227 shows AS/400 DBCS printing via CM/2. A 5250 WSF printer session is configured as a 5553-B01 on the AS/400. The AS/400 will allow a spooled file with IGCDTA(*YES) to be sent to the session. When CM/2 receives an AS/400 SCS IGCDTA(*YES) spooled file in a 5250WSF printer session, it is passed to OS/2 where the data is converted using the code page setting in the OS/2 configuration file. The print output is passed to the OS/2 Printer Manager where the DBCS Adobe Type Manager outline fonts are used to print the DBCS characters.

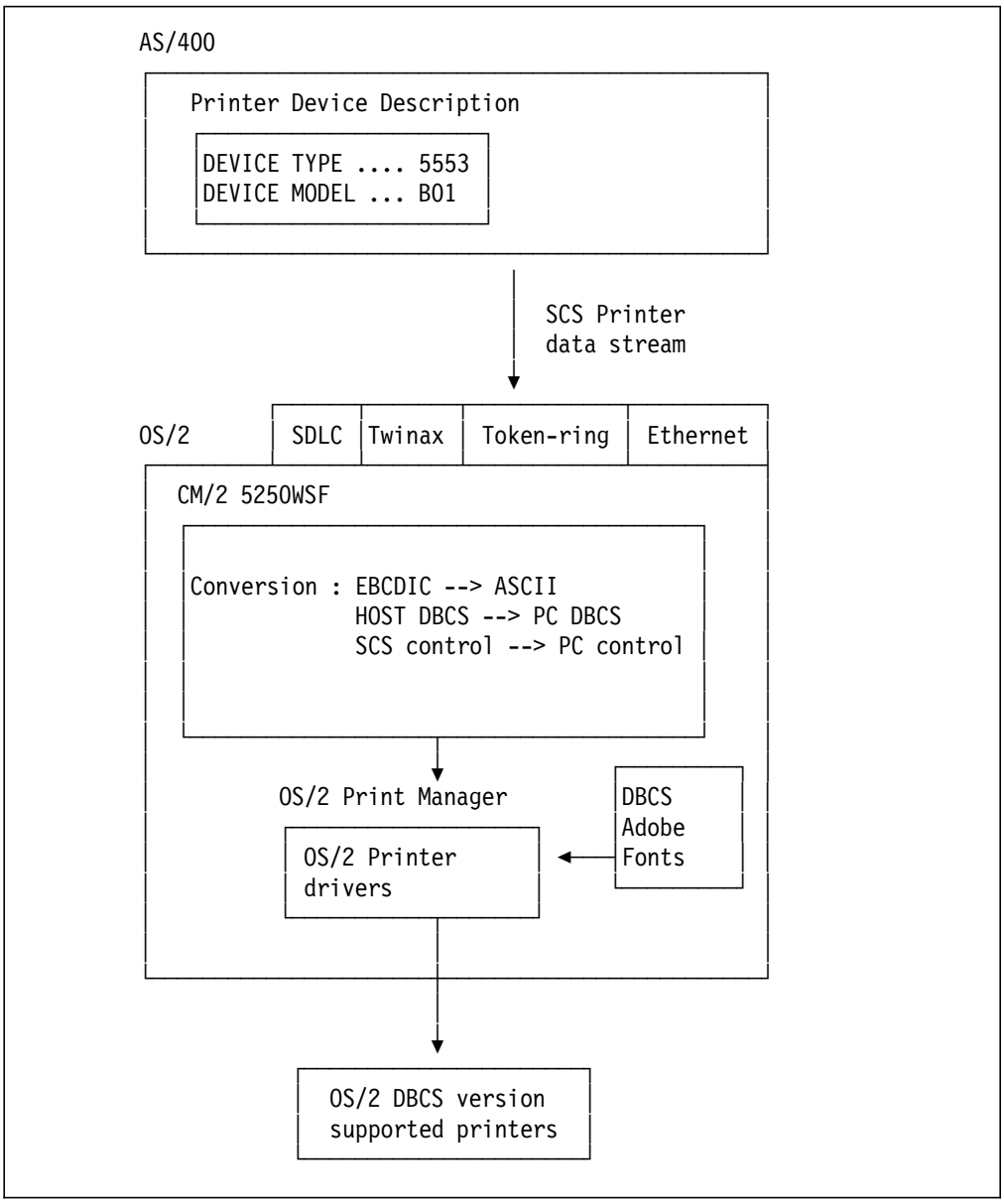

Figure 92. AS/400 DBCS Printing via CM/2

9.3.3 Network Printing

There are various methods of printing spooled files containing DBCS characters across a network to another AS/400, to a S/390 system, and to S/3x systems.

Since S/390 and S/3x use the same DBCS coding scheme as an AS/400, no DBCS code conversion has to be carried out. DBCS data can be sent between these systems using the EBCDIC coding scheme.

DBCS printing is fully supported by the SNA and TCP/IP communications protocols. However, when sending a DBCS SCS spooled file to another system using TCP/IP, you cannot make use of the host print transform function to convert it to ASCII. The host print transform does not support DBCS and the data will be corrupted if this option is selected.

When sending a DBCS spooled file to another system (non-AS/400) you must ensure that the record format on the SNDNETSPLF is set to *ALLDATA or you will lose the DBCS attributes. Chapter 2, “Remote System Printing” on page 31 discusses the use of remote system printing and you should take particular note of whether the spooled file attributes are retained when sending spooled files to various other system types.

Network printing is also discussed in Chapter 4 of the redbook *AS/400 Printing III*, GG24-4028.

9.3.4 AFP Printers with DBCS Support

Not all IPDS printers can support DBCS printing, even when they are defined to the AS/400 as AFP(*YES). Only the following printers support the downloading of the AFP DBCS fonts, which is the only way to print DBCS using AFP. These printers are all 240-pel resolution printers. The AFP DBCS fonts are only available in 240-pel resolution. This means that 300-pel printers such as the IBM 4028, 3912, 3916 and 3935 cannot at present be used to print DBCS data. The following IPDS printers support DBCS:

- IBM 3820, with an optional feature
- IBM 3825
- IBM 3827
- IBM 3828
- IBM 3829
- IBM 3835-001
- IBM 3835-002
- IBM 3900 (all models)
- IBM 3930 with optional feature

Note: Because double-byte character sets are so large, whenever any of these printers are used to print double-byte characters they should be configured with the maximum amount of pattern storage available.

If the printer is attached using the Distributed Print Function (DPF) of PSF/2, DBCS support will depend upon the printer itself. For IPDS printers, only those in the list above will support DBCS printing. You cannot print to PPDS or PCL5 printers since IPDS DBCS fonts are only available at 240-pel resolution and these printers all work at 300-pel resolution. PSF/2 does not convert from one resolution to another. The resolution of resources sent from the AS/400 have to be at the correct resolution for the printer or the spooled file will be held on the output queue, and an error message issued. For further details on the PSF/2 DPF functions, please refer to chapter 3 of *AS/400 Printing III*, GG24-4028.

There are some considerations when you plan to print DBCS on AFP printers.

- **Downloading DBCS fonts**

  The whole double-byte character set has to be downloaded to AFP printers because they do not support printer resident DBCS fonts. For example, it can take from several minutes to an hour to download a Traditional Chinese font. Once these fonts have been downloaded to the printer, they will stay in the printer memory until the printer writer is ended, the printer is powered off, or they are swapped out of memory because the memory is required for other resources.

  You should configure AFP printers with maximum memory if you are going to print DBCS.

- **Changing DBCS fonts**

  If different sets of DBCS fonts are required, ensure that there is enough pattern storage installed in the printers. For example, 4MB of pattern storage provides enough space to hold up to two sets of Traditional Chinese fonts. If there is not enough memory to hold all the resources for a job, the printer will frequently stop to download the different resources as they are required.

Let us consider AS/400 printing to AFP printers in a little more detail. Figure 93 on page 230 shows the flow of SBCS spooled files through the AS/400 for three different printer device types.

SCS spooled file Single-byte SCS spooled files are sent directly to an SCS printer or converted to be sent to IPDS printers. The SCS spooled file will be converted to the AS/400 generated IPDS subset and sent to an IPDS printer defined as AFP(*NO). If the destination printer is defined as AFP(*YES) then the SCS spooled file will be further converted to AFPDS and passed to PSF/400 where a full function IPDS data stream is built.

IPDS spooled file A single-byte IPDS spooled file can be printed directly to a printer defined as AFP(*NO) or converted to AFPDS and passed to PSF/400 if the printer is defined as AFP(*YES). PSF/400 will build a full function IPDS data stream to be sent to the printer.

AFPDS spooled file AFPDS spooled files can only be sent to PSF/400 or other PSF servers and printed on IPDS printers defined as AFP(*YES).

Now let us contrast that picture with Figure 94 on page 231 which shows how DBCS printing is handled by the AS/400 to these three printer types.

SCS spooled file SCS IGCDTA(*YES) spooled files can be sent directly to SCS printers that support double-byte printing, or converted to IPDS. You will notice that the AS/400 IPDS subset does not support DBCS, so this spooled file cannot be printed on a printer defined as AFP(*NO). However, it can be converted to the IPDS subset, and then from there it can be converted again to AFPDS and sent to PSF/400, where it can be printed on a DBCS capable IPDS printer defined as AFP(*YES). The SCS-to-IPDS converter does not touch the DBCS attributes; they are passed to the IPDS-to-AFPDS conversion untouched. Then, AS/400 generated IPDS is converted to AFPDS and passed to PSF/400. PSF/400 converts AFPDS with AFP resources including AFP DBCS fonts and prints it on an IPDS AFP(*YES) printer with DBCS support.

If a double-byte SCS file is to be printed on a double-byte capable SCS printer, there is no need to specify a font. The SCS printer will be configured with a particular DBCS language and character resolution. You have no choice over the font - you will use the only one available in the printer. However, if this SCS file is to be converted to print on an IPDS printer, we will need to specify a coded font to

be downloaded to the IPDS printer. You specify the DBCS coded font in the printer file parameter IGCCDEFNT. This parameter is simply ignored if the file is sent to an SCS printer.

IPDS spooled file An AS/400 generated IPDS spooled file does not support DBCS.

AFPDS spooled file An AFPDS IGCDTA(*YES) spooled file will be processed in PSF/400 and printed to a DBCS capable printer configured with IPDS AFP(*YES). The coded font specified in the IGCCDEFNT parameter of the printer file will be used to print the double-byte characters.

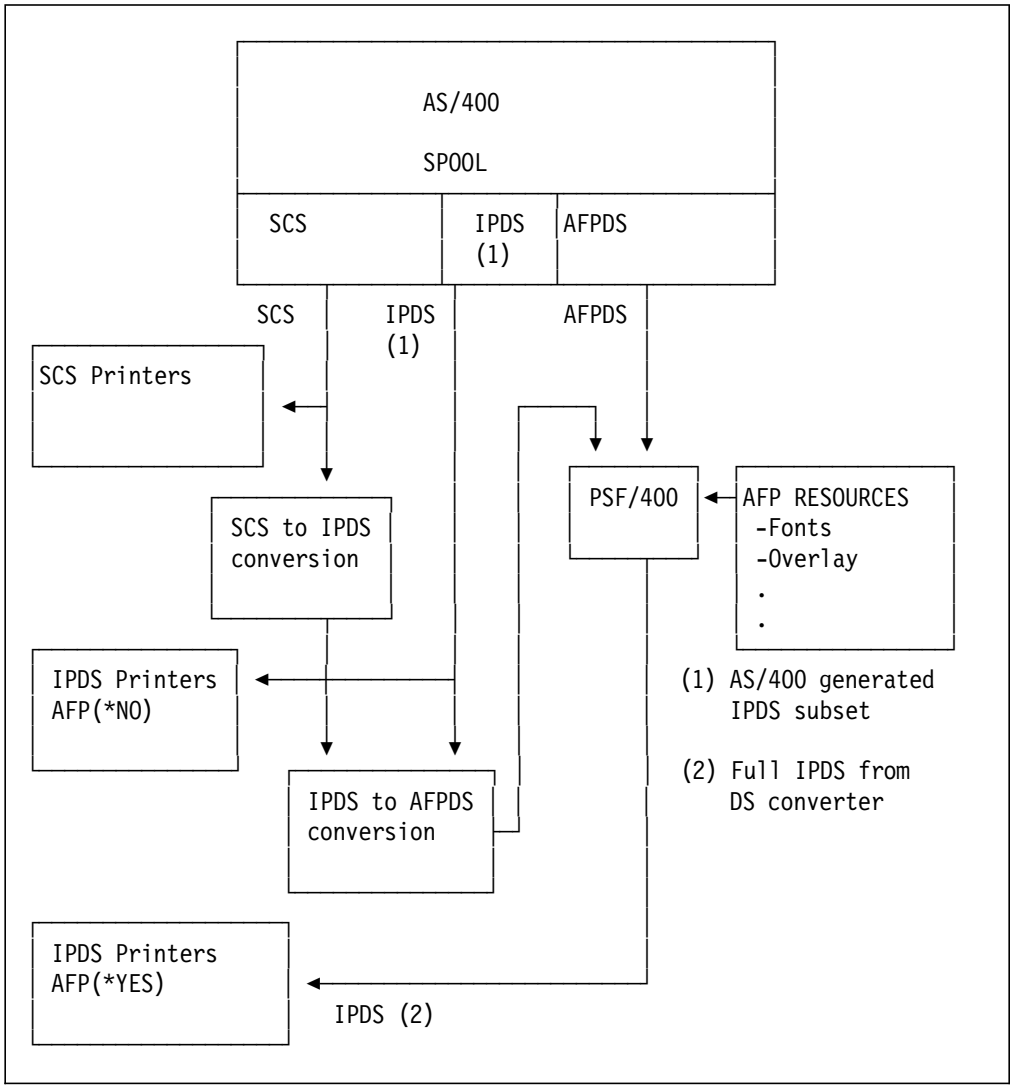

Figure 93. AS/400 Printer Data Stream Flow with SBCS Support

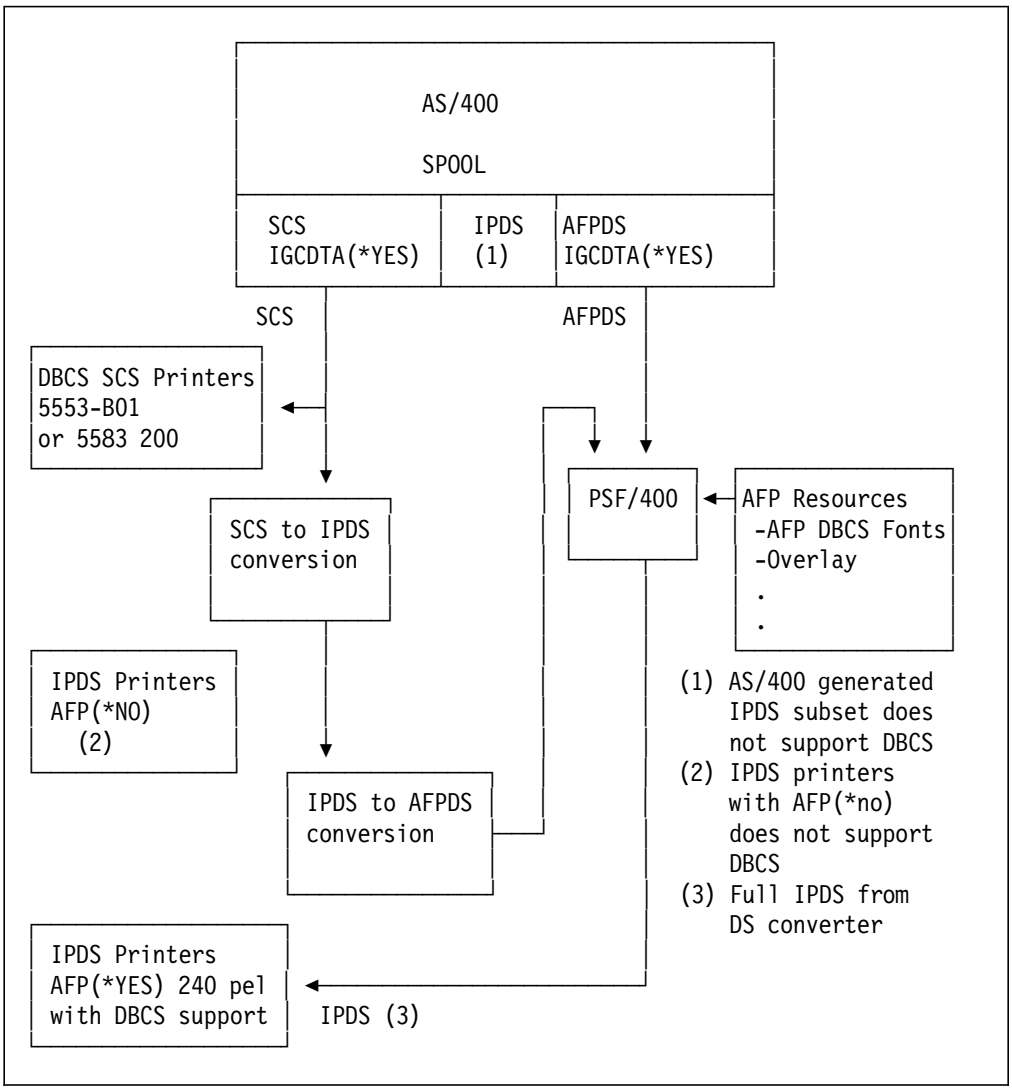

Figure 94. AS/400 Printer Data Stream Flow with DBCS Support

9.4 How to Print Double-Byte Characters

After the DBCS environment has been enabled, DBCS data can be processed and printed by the AS/400. The AS/400 uses some mechanisms to handle double-byte characters. These mechanisms are invoked by some DBCS attribute controls. The DBCS attributes that relate to printing include data base file support, device file support, printer support and spooling support.

9.4.1 Where You Can Use Double-Byte Characters

Double-byte data can be stored and processed in the following ways:

- Data in files
  - Database files
  - Input, output fields of display files
  - Output fields of print files
  - Message text of message files
  - Literals of printer files and display files

- Text of messages
- Text of object descriptions
- Constants, literals and data processed by high-level languages or Control Language (CL)
- Data processed by Utilities such as SEU, DFU, SDA, SQL, Query, Sort...

9.4.2 How to Indicate Double-Byte Characters

Extra information is required when the AS/400 processes double-byte characters. There are parameters or keywords to indicate double-byte characters. Before you can try to find out what these parameters are, you must install the DBCS features for OS/400, Otherwise, some parameters and keywords can not be prompted and used. There are, however, exceptions for some attributes of database physical files, source physical files, and printer files. For instance, the IGCDTA keyword can be used and prompted on an SBCS only AS/400 with OS/400 Version 2 Release 2 or later.

The system value QIGC indicates if the OS/400 system is DBCS enabled. Figure 95 shows the result of issuing the command DSPSYSVAL SYSVAL(QIGC).

```
                              Display System Value

System value . . . . . .:   QIGC
Description  . . . . . .:   DBCS version installed indicator


DBCS version . . . . . .:   1          0=Not installed
                                       1=Installed

Press Enter to continue.

F3=Exit   F12=Cancel
```

Figure 95. Display QIGC System Value

In addition to the AS/400 system value QIGC there are some other DBCS attributes on printer files and DDS keywords which are only used for DBCS printers. These are discussed in the following sections.

9.4.2.1 DBCS Parameters on the Printer File

```
                         Create Printer File (CRTPRTF)

Type choices, press Enter.

File . . . . . . . . . . . . . . . FILE
  Library  . . . . . . . . . . . .                  *CURLIB
Source file  . . . . . . . . . . . SRCFILE        *NONE
  Library  . . . . . . . . . . . .
Source member  . . . . . . . . . . SRCMBR         *FILE
Generation severity level  . . . GENLVL         20
Flagging severity level  . . . . FLAG           0
Device specification:            DEV
  Printer  . . . . . . . . . . . .                *JOB
Printer device type  . . . . . . DEVTYPE        *SCS
User specified DBCS data . . . . IGCDTA         *YES    1
DBCS extension characters  . . . IGCEXNCHR      *YES    2
Text 'description' . . . . . . . TEXT           *SRCMBRTXT
Spooled output schedule  . . . . SCHEDULE       *FILEEND
Hold spooled file  . . . . . . . HOLD           *NO
Save spooled file  . . . . . . . SAVE           *NO
Output priority (on OUTQ)  . . . OUTPTY         *JOB
User data  . . . . . . . . . . . USRDTA         *SOURCE
DBCS character rotation  . . . . IGCCHRRTT      *NO     3
DBCS characters per inch . . . . IGCCPI         *CPI    4
DBCS SO/SI spacing . . . . . . . IGCSOSI        *YES    5
DBCS coded font  . . . . . . . . IGCCDEFNT      *SYSVAL 6
  Library  . . . . . . . . . . . .
Maximum file wait time . . . . . WAITFILE       *IMMED
Share open data path . . . . . . SHARE          *NO
Record format level check  . . . LVLCHK         *YES
Authority  . . . . . . . . . . . AUT            *LIBCRTAUT
Replace file . . . . . . . . . . REPLACE        *YES

                                                                    Bottom
F3=Exit   F4=Prompt   F5=Refresh   F12=Cancel   F13=How to use this display
F24=More keys
```

Figure 96. DBCS Parameters on Printer File

1 IGCDTA

The value of the IGCDTA parameter on the printer file gives different results depending on whether it is a program-described printer file or an externally described printer file.

- For program-described files:

  ***NO** The file does not process DBCS data.

  ***YES** The file processes DBCS data.

- For externally-described files:

  ***NO** The DBCS attributes of the file are defined in the Data Description Specifications (DDS).

  ***YES** DBCS attributes in addition to those defined in the DDS include:

  1. Enabling the DDS keyword for alternative data type (IGCALTTYP).
  2. Identifying double-byte character attributes of fields or messages not identified in the field

2 IGCEXNCHR

The DBCS extension character (IGCEXNCHR) specifies whether the system processes DBCS extended characters. These characters, most of which are user-defined characters, are those characters which are not included in the basic set of characters defined in the printer resident font.

***YES** The system processes DBCS extension characters.

***NO** The system does not process DBCS extension characters; it prints extension characters as the undefined character.

For details, please refer to Appendix F of the manual *AS/400 Printer Device Programming - Version 3*, SC41-3713.

3 IGCCHRRTT

DBCS character rotation (IGCCHRRTT) specifies whether the printer rotates DBCS characters 90 degrees counterclockwise when printing. DBCS characters are either written horizontally or vertically. The system can rotate DBCS characters so that they appear in a vertical or horizontal reading sequence. Alphanumeric characters are not rotated. The possible values are:

***NO** AS/400 does not rotate DBCS characters when printing.

***YES** AS/400 rotates DBCS characters 90 degrees counterclockwise when printing. The printer rotates each character individually.

4 IGCCPI

IGC characters per inch (IGCCPI) specifies the printer character density of DBCS characters, in characters per inch (CPI). “Character” here is a DBCS character which occupies double the space of an SBCS character. For example, 10 CPI is actually the same as 5 IGCCPI. The possible values are:

***CPI** DBCS character density is the same as that specified for the Characters per inch prompt (CPI parameter). This is the default value.

5 DBCS character density is 5 characters per inch.

6 DBCS character density is 6 characters per inch.

10 DBCS character density is 10 characters per inch.

***CONDENSED** Condensed printing. This option is only valid for SCS DBCS printers. With this option, the system prints 20 DBCS characters per 3 inches. It condenses the space between DBCS characters instead of the DBCS characters themselves.

5 IGCSOSI

A parameter (IGCSOSI) of the printer file dictates how the SO (Shift-Out) and the SI (Shift-In) DBCS control characters will be treated when the output is actually printed. The values for this parameter are:

***YES** A space is printed each time a SO or SI control character is encountered.

***NO** The SO and SI control characters are ignored and no space is printed when they are encountered.

***RIGHT** The printer prints two spaces when it encounters an SI character, but does not print anything in place of the SO characters.

6 IGCCDEFNT

DBCS coded font (IGCCDEFNT) is the parameter to specify the font that the system uses for DBCS printing on IPDS printers. This parameter is only valid for printer files with DEVTYPE(*SCS) or (*AFPDS) when printing on IPDS AFP(*YES) printers.

- **SCS spooled files**

  When SCS spooled files go to an AFP(*YES) printer, the SCS to AFPDS data stream transforms are done by the OS/400. The IGCCDEFNT parameter is used to specify the name and location of the AFP DBCS font. If you do not specify this keyword, the system value QIGCCDEFNT will be used as the default. DBCS SCS spooled files will contain SO/SI (Shift-Out and Shift-In) DBCS control characters to identify where the DBCS data is. When the printer writer is printing a DBCS SCS spooled file to an AFP printer, a font change to a DBCS coded font replaces the SO in the AFPDS data stream and a change back to the previous SBCS font replaces the SI character. The spooled file will be held if the AS/400 cannot find the DBCS coded font.

- **AFPDS spooled files**

  The IGCCDEFNT parameter should be specified when generating DBCS AFPDS. If you do not specify this keyword, the system value QIGCCDEFNT will be used as the default.

  The DBCS font specified in the printer file IGCCDEFNT parameter will be used to print any DBCS data encountered in a record or field. The IGCCDEFNT can be overridden by specifying the IGCCDEFNT DDS keyword at a record or field level.

9.4.2.2 DBCS Attributes of DDS

In addition to printer file DBCS attributes, there are some DBCS related parameters in AS/400 commands and DDS DBCS related data types and keywords for DBCS printing.

- **IGCDTA(*YES) on file attribute**

  By specifying IGCDTA(*YES) on the following database file commands the AS/400 will accept DBCS data into database files.

  – Create physical file (CRTPF)

  – Create source physical file (CRTSRCPF)

  – Change physical file (CHGPF)

  – Change source physical file (CHGSRCPF)

- **DDS data type**

  You can use the DDS data type, or DDS keywords to specify DBCS attributes. A data field must be defined with a DBCS data type before data base files will accept double-byte characters. The DBCS related data types are:

  J-type (DBCS-only Field)
  Only double-byte characters can be stored in this field. The field is always enclosed in SO (shift-out) and SI (shift-in) DBCS control characters which will occupy two bytes of the length of the field. The field length must always be even. This data type cannot be specified for printer files.

O-type (Open Field)

Open fields support both DBCS data and SBCS data. The field can contain either SBCS or DBCS, or it can contain mixed data. The DBCS characters must be enclosed in pairs of SO (shift-out) and SI (shift-in) DBCS control characters.

E-type (Either Field)

Either fields support either SBCS characters or DBCS characters but not both at the same time. The field length must be even. This data type cannot be specified for printer files.

G-type (Graphic Field)

Graphic fields only support DBCS characters. They are different from J-type as the SO (shift-out) and SI (shift-in) DBCS control characters do not occupy any field length.

Note: DBCS G-type data is supported for externally-described (DDS) printer files only. For program-described printer files, the application program must enclose the DBCS G-type field with the appropriate shift-out and shift-in characters.

- **DDS keywords**

The following DDS keywords can be used with DBCS data:

CHRSIZ You can enlarge DBCS characters in printed output by using this keyword. However, this keyword works correctly for DBCS printing only on printers configured as an IBM 5553. More DBCS character magnification is provide by APW. APW is a part of APSU/400 (5763-AP1) licensed program which we will discuss in 9.4.3.1, “Advanced DBCS Printer Support/400 (APSU/400)” on page 237.

IGCALTTYP This keyword can only be specified for DDS character fields. This keyword indicates that the field can be an SBCS character field or a DBCS O-type field depending on the IGCDTA parameter of the printer file. It provides programming flexibility when the DDS is being used on DBCS or SBCS only systems.

IGCCHRRTT The IGC Character Rotation (IGCCHRRTT) keyword rotates each DBCS character 90 degree counterclockwise before printing and the resulting printed output can be read vertically. It can be specified at the field or record level and is valid for IBM 5553 or AFP(*YES) DBCS printers.

DFNLIN The Define Line (DFNLIN) record level keyword is used to draw a horizontal or vertical line on a SCS DBCS printer. The drawn line is known as a “grid line” and is used to print a box or grid to improve readability of DBCS output. A horizontal line is drawn on the bottom of the character box and a vertical line is drawn on the left edge of the character box.

9.4.3 DBCS Unique Licensed Programs and Tools

DBCS printing has its unique requirements such as user-defined characters. AS/400 provides licensed programs and tools to support these unique requirements and enhances its usability.

9.4.3.1 Advanced DBCS Printer Support/400 (APSU/400)

The IBM Advanced DBCS Printer Support/400 program (5763-AP1) provides additional DBCS printing functions for DBCS SCS printers. There are five utilities in the licensed program as follows.

- Advanced Printer Writer (APW)
- Advanced Page Printer Writer (APPW)
- Kanji Printer Function (KPF)
- Printer Form Description/Symbol Migration Aid
- Printer Function Control (PFC)

Advanced Printer Writer (APW) is the only one of these utilities that supports all DBCS languages. The other four utilities are only valid for Japanese.

The Advanced Print Writer (APW) of IBM Advanced DBCS Printer Support/400 provides advanced functions for DBCS printing. These functions include the ability to do the following:

- Design alternate character sets and symbols which include additional font styles, special symbols and additional language characters.
- Print barcodes.
- Print printer-resident Optical Character Recognition (OCR-B) fonts.
- Magnify character size.
- Design logos, emblems, signatures and large characters.
- Merge spooled data with a form description.
- Print mixed characters-per-inch on the same line.
- Support 240-pel symbols for use on high resolution printers.
- Grid line printing.
- Vertical character printing.
- Character and line spacing control.
- SO/SI DBCS control character printing.
- User created form printing.

Note:

The new functions of Version 3.0 Release 1.0, printing of barcodes, additional variations in character magnification, and OCR-B font support are applicable only for printing on the IBM 5417 printer.

For more information, please refer to Chapter 18 of the manual *AS/400 Printer Device Programming - Version 3*, SC41-3713.

9.4.3.2 Font Management Aid (FMA)

The Font Management Aid (FMA) is started by the STRFMA command. From this command, you can work with user-defined characters (24 X 24 dot matrix) in the AS/400 DBCS font table with a workstation font file ($SYS1Z24.FNT). You can copy user-defined characters from the workstation font file to the AS/400 DBCS font table, and copy user-defined characters from the AS/400 DBCS font table to the workstation font file. FMA is also used to get a copy of the workstation User-Font/Dictionary file from a DBCS terminal or DBCS emulation program to another PC which also provides FMA support. For details on the use of the Font Management Aid, refer to the manual *AS/400 System Operations: Font Management Aid User's Guide*, SC18-2216.

9.4.3.3 Character Generator Utility (CGU)

The Character Generator Utility (CGU), which is part of the Application Development Tools licensed program, is used to define and maintain a set of double-byte characters on the AS/400 system. It is invoked by the STRCGU command and only valid for DBCS systems. You can create, update, and delete user-defined characters on the AS/400 via the utility.

Without the utility you would have to use the utilities provided by the PC environment, and use the FMA product to load them onto the AS/400. In addition to maintaining user-defined characters, the utility also provides you with the ability to update SORT information for DBCS characters. In this case, DBCS characters can be sorted by the AS/400 in the sequence which you want. For more information about CGU, please refer to the manual *The Character Graphics Utility User's Guide and Reference*, SC09-1170.

Note: Even though the title of this manual does not match the title of the product, this is the manual that describes the function of the Character Generator Utility.

9.4.4 Special Considerations for DBCS Printing

Since DBCS processing has extra control information, there are some special considerations for DBCS printing.

9.4.4.1 System Supplied Printer File

The AS/400 supplies some printer files for system function use. The IGCDTA parameter of some system supplied printer files will be set to *YES when OS/400 with a DBCS language feature is installed.

IGCDTA(*YES) or IGCDTA(*NO) spooled files work fine for a pure DBCS device environment, but for a mixed SBCS and DBCS device environment, spooled files defined as IGCDTA(*YES) cannot be printed on SBCS printers even if they do not contain any DBCS data. For example, the QSYSPRT printer file for printing screen copies will be set to IGCDTA(*YES) by default on an AS/400 DBCS system and can not be processed on an SBCS printer. Moreover, some applications use the command CPYSPLF to copy some spooled files to database files for program processing. It will cause an application abend if you try to use this technique on spooled files with IGCDTA(*YES) and database files with IGCDTA(*NO). You can specify OVRPRTF IGCDTA(*NO) before creating the spooled file to prevent such errors.

9.4.4.2 User-Defined Character Font Maintenance

User-defined characters are assigned a two-byte code in the user defined code area which is either system defined in sequence or user-defined. One double-byte code in the user-defined code area could represent different DBCS characters on different printers or terminals. User-defined characters have to be consistent among AS/400s, PCs, and terminals.

Figure 97 shows how user-defined characters can be created in a DBCS font table using CGU or uploaded from PCs. Other PCs or terminals can download them from the AS/400 DBCS font table using FMA.

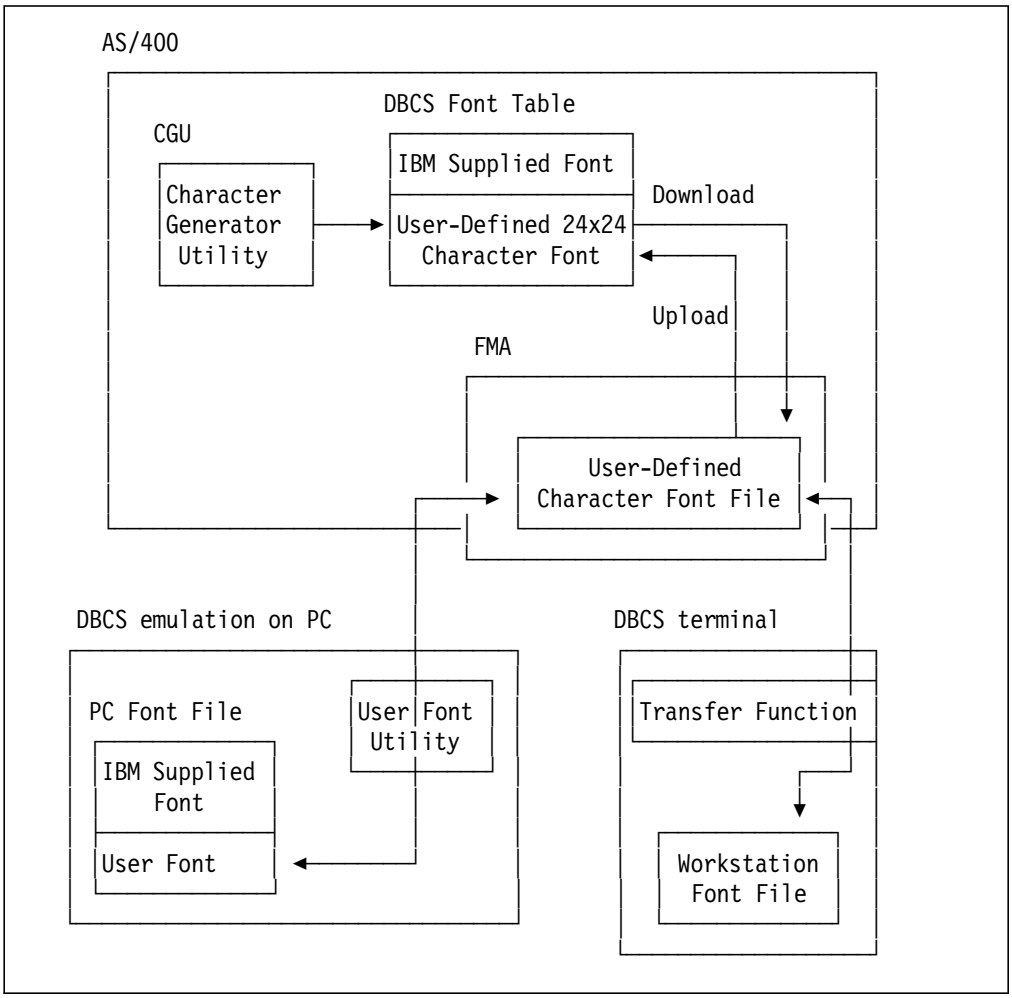

Figure 97. DBCS Font Maintenance

In order to maintain consistency between user-defined character font files across AS/400s, PCs and terminals, FMA is very useful to exchange these fonts and codes between DBCS PCs, DBCS terminals, and the AS/400. The AS/400 DBCS fonts which include user-defined characters could be distributed to other AS/400s via SNA Distribution Services (SNADS).

Currently, AFP DBCS fonts do not provide these user-defined characters to append to the font, so these characters cannot be printed on IPDS printers.

9.4.4.3 Unprintable DBCS Characters

Although DBCS data can be forced to display meaningless characters on an SBCS terminal, the printer writer will hold the spooled file when you try to send DBCS data to a non-DBCS capable printer.

For DBCS SCS printers, the DBCS Extension Characters (IGCEXNCHR) parameter of the printer file provides AS/400 DBCS font support to twinax attached DBCS SCS printers which do not have a proper resident DBCS font. However, this does not work for DBCS SCS printers attached via DBCS terminals or DBCS emulation. If the user-defined characters are not downloaded to the terminal or PC in advance, they will become undefined DBCS characters.

For these undefined DBCS characters, DBCS printers will print the special symbol " ⍰" by default. Although printed as an undefined character, they are stored correctly in the system.

9.4.4.4 AS/400 as a DBCS PC Printer Server via Client Access/400

Since Client Access/400 support provides the Virtual Printer function to allow PC applications to print output on AS/400 attached printers, the PC printed output will be converted to host DBCS and will be enclosed in an SCS data stream for sending to AS/400 SCS printers. The DBCS data is printed correctly in text mode.

Sometimes, the PC client prints out PC documents with PC control codes. These control codes are not supported by the AS/400 SCS data stream. The AS/400 will lose these PC control codes during conversion, even though the AS/400 printer is emulating a PC printer. In this case, the *USERASCII data stream can be used to transparently pass the PC control codes from a PC client to a PC printer emulated as an AS/400 printer via the *USERASCII function which is supported by most terminals and emulation programs.

This is the way the AS/400 provides for ASCII data to be passed transparently through the AS/400 to ASCII printers without conversion. However, this will only work for terminals and emulation programs which support ASCII transparency.

Chapter 10. LANRES/400 Printing

LAN Resource Extension and Services/400 (LANRES/400), program number 5733-CSA, integrates NetWare LANs and AS/400 environments. It extends and expands data availability by providing LAN users access to AS/400 data and by providing AS/400 users access to data generated on the LAN. NetWare workstation users benefit from the workstation response and inter-workstation communication on the LAN and from an AS/400 computing environment. Print serving is also provided for both LAN-to-Host and Host-to-LAN.

LANRES/400 lets:

- AS/400 users administer multiple NetWare servers
- AS/400 users and NetWare workstation users print documents on printers located throughout your site
- AS/400 users manage NetWare files and directories
- NetWare workstation users store data on the AS/400

LANRES/400 allows NetWare clients to print on AS/400 printers and AS/400 users to print on personal printers attached to the LAN. In order to do that, LANRES/400 includes both LAN-to-Host and Host-to-LAN print support. This chapter covers both these topics. Additional information about the LANRES/400 program can be found in *Managing Novell Servers with LANRES/400*, GG24-4373.

10.1 LANRES/400 LAN-to-Host Print

The LANRES/400 LAN-to-Host print function allows NetWare users to send printed output to an AS/400 printer.

The NetWare users simply send their printing to a NetWare printer queue that is monitored by EWXLHPRT, the LAN-to-Host print NLM. The LANRES/400 print server on the AS/400 receives the output from the EWXLHPRT module and calls an exit routine to process the file for printing.

There are three exit programs supplied with LANRES/400 and we have provided a fourth example:

1. EWXLINE

   This exit program translates the NetWare print data from ASCII to EBCDIC, and needs as an input parameter an AS/400 printer file (PRTLIB/PRTF) with a maximum line length of 132.

2. EWXSENDF

   This is used to send a printout via SENDNETF to a user ID and system name. You can send the output with or without translation.

3. EWXLHASCII

   EWXLHASCII is a REXX procedure that copies the NetWare data to an AS/400 spooled file so that it can be printed on an ASCII printer attached to the AS/400 (PC Support/400 printer emulation).

4. AFPDS

We created an AFPDS REXX exit program that you can use for printing output from Windows and OS/2 applications on an AS/400 printer.

10.1.1.1 LAN-to-Host AS/400 and NetWare Objects

Since there are many different objects, printer queues and servers involved in LAN-to-Host printing, Figure 98 shows how all the objects are related.

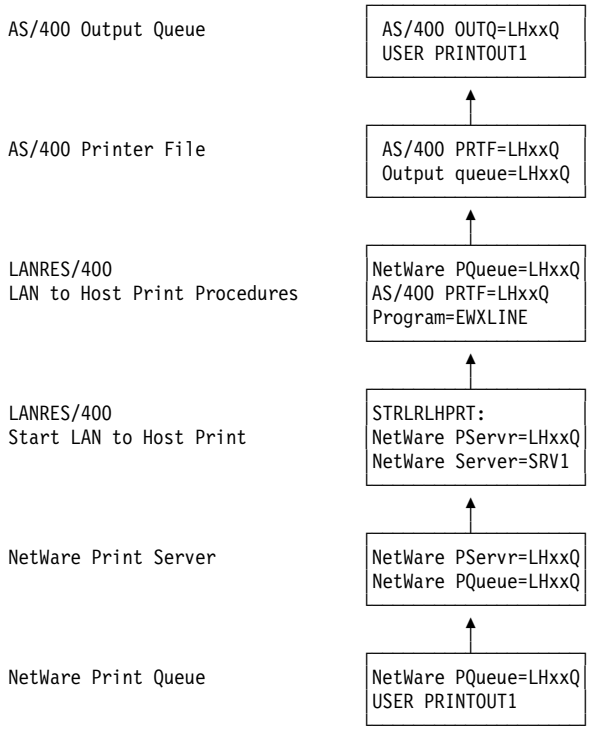

Figure 98. LANRES/400 LAN-to-Host Objects

You first create a print queue and server on the NetWare** server. You do not have to start the PSERVER NLM on the server.

On the AS/400 you create an output queue and a printer file for the output queue. In the LANRES/400 LAN to Host print procedures file, you specify the printer file name and the NetWare printer queue name. You also specify the exit program - the conversion is performed on the AS/400.

Finally, you start the LANRES/400 LAN to Host print function as a batch job, intercepting the output from the NetWare print server linked to the NetWare print queue.

10.1.2 LAN-to-Host Print Commands

Table 19 on page 243 shows equivalent LANRES/400 and NetWare commands for LAN-to-Host printing.

Table 19. Equivalent LANRES/400 and NetWare Commands for LAN-to-Host Printing			
LANRES/400	**NetWare**	**Description**	**Menu (Option)**
ADDNWPSTPQ *	PCONSOLE	Assigns a print server to a print queue	LRPRTRQ (7)
CRTNWPRTQ *	PCONSOLE	Creates a NetWare print queue	LRPRTRQ (1)
CRTNWPRTS *	PCONSOLE	Creates a NetWare print server	LRPRTRQ (4)
DLTNWPRTQ *	PCONSOLE	Deletes a NetWare print queue	LRPRTRQ (3)
DLTNWPRTS *	PCONSOLE	Deletes a NetWare print server	LRPRTRQ (6)
ENDLRJOB		Ends LANRES/400 jobs; stops the LANRES/400 print running on the AS/400	
RNMNWPRTQ *	PCONSOLE	Renames a NetWare print queue	LRPRTRQ (2)
RNMLRPRTS *	PCONSOLE	Renames a NetWare print server	LRPRTRQ (5)
STRLRLHPRT		Starts the LANRES/400 LAN-to-host print server running on the AS/400	Used with SBMJOB
WRKLRLHPP		Lets you work with the settings in the print procedures configuration file	

Note: All commands marked with an asterisk (*) are considered to be administration commands, because you have to be connected to the server using the ADMIN function to use them. These are required for LAN-to-Host printing.

10.1.3 LAN-to-Host Printing Example using EWXLINE

This section gives an example of configuring the LAN-to-Host printing function using the exit program EWXLINE.

Let's suppose that a NetWare user in Rochester wants to print a file called MYFILE.DAT on an AS/400 in Chicago.

1. First make sure that the EWXLHPRT.NLM is loaded on the NetWare server.
2. Now start the LANRES/400 administration function in your AS/400 session. This is required to create printers and queues with LANRES/400.
3. Use the following command to display the *NetWare printer and Queues* menu as shown in Figure 99.

   ```
   GO LRPRTRQ
   ```

```
LRPRTRQ                  NetWare Printers and Queues
                                                          System: RCH149
Select one of the following:

     1. Create print queue
     2. Rename print queue
     3. Delete print queue
     4. Create print server
     5. Rename print server
     6. Delete print server
     7. Add print server to print queue
     8. Remove print server from print queue

Selection or command
===> 4

F3=Exit   F4=Prompt   F9=Retrieve   F12=Cancel
```

Figure 99. NetWare Printers and Queues Menu

4. Select option 4, *Create print server* and create a LANRES/400 print server called L2HPSERVER as shown in Figure 100.

```
                    Create NetWare Print Server (CRTNWPRTS)

 Type choices, press Enter.

 Print server . . . . . . . . . .   L2HPSERVER


                                                                  Bottom

F3=Exit   F4=Prompt   F5=Refresh   F12=Cancel   F13=How to use this display
F24=More keys
```

Figure 100. Creating a NetWare Print Server

5. Now select option 1, *Create print queue* on the NetWare Printers and Queues menu. Create a NetWare print queue called L2HPQUEUE as shown in Figure 101.

```
                    Create NetWare Print Queue (CRTNWPRTQ)

 Type choices, press Enter.

 Print queue  . . . . . . . . . .   L2HPQUEUE

 Print server . . . . . . . . . .   L2HPSERVER

  F3=Exit   F4=Prompt   F5=Refresh   F12=Cancel   F13=How to use this display
  F24=More keys
```

Figure 101. Creating a NetWare Print Queue

6. Create an output queue on the AS/400 with the following command:

   ```
   CRTOUTQ OUTQ(ITSCLAN/L2HQ)
   ```

7. Now create an AS/400 printer file with the following command:

   ```
   CRTPRTF FILE(ITSCLAN/PRTF) DEVTYPE(*SCS) CTLCHAR(*FCFC) OUTQ(ITSCLAN/L2HQ)
   ```

8. Next you need to update the LAN-to-host procedures file. Use the following command and then press Enter to accept the default print procedures file and you will be prompted with the screen shown in shown in Figure 102.

   ```
   WRKLRLHPP
   ```

```
                          Work with LAN Prt Procedures

 File . . . . . . . . :   QLANRESPRT      Member . . . . . . . :   HLPROCS
   Library  . . . . . :     QUSRSYS

 Type options, press Enter.
   1=Add   2=Change   4=Remove   5=Display

 Opt     Queue
  1      L2HPQUEUE

                                                                        Bottom
Command
===>
F3=Exit   F4=Prompt   F9=Retrieve   F12=Cancel
```

Figure 102. Working With LAN Print Procedures

9. Add your NetWare printer queue, press Enter and you will be prompted for the exit program and printer file as shown in Figure 103.

```
                             LAN Print Procedure

 Print queue . . . . . . :   L2HPQUEUE
 Routine type  . . . . . .   *PGM
 File or program . . . . .   EWXLINE
   Library . . . . . . . .     *LIBL
 Member  . . . . . . . . .
 Parameters  . . . . . . .   ITSCLAN/PRTF


 Press Enter to continue

 F3=Exit   F12=Cancel
```

Figure 103. Configuring a LAN Print Procedure

10. Now start the LAN-to-host print on the AS/400. Use the following command and press F4 to submit a job to the batch job queue:

    ```
    SBMJOB STRLRLHPRT
    ```

11. Press F10 to prompt for the additional parameters as shown in Figure 104.

```
                    Start LANRES LAN-to-Host Print (STRLRLHPRT)        Level 2

Type choices, press Enter.

Queue server . . . . . . . . . .   L2HPSERVER

Retries  . . . . . . . . . . . .   *DFT
Nickname . . . . . . . . . . . .

Communication protocol . . . . .   *APPC         *APPC, *TCPIP
Communication target . . . . . .   ITSC312

PWIN . . . . . . . . . . . . . .   ITSC          Character value
PWOUT  . . . . . . . . . . . . .   ITSC          Character value
 Password file  . . . . . . . .                   Name
   Library  . . . . . . . . . .     *LIBL         Name, *CURLIB, *LIBL
 Member . . . . . . . . . . . .                   Name
 Logging  . . . . . . . . . . .   *OFF            *ON, *OFF

 F3=Exit   F4=Prompt   F5=Refresh   F12=Cancel   F13=How to use this display
 F24=More keys
```

Figure 104. Starting LANRES/400 LAN-to-Host Print

12. Press Enter and change the following job parameters to ensure that errors are logged to the joblog:

    ```
    JOB(L2H)
    LOG(4 00 *SECLVL)
    ```

    We also recommend that you change the job name to make it easier to identify later.

13. Now test your configuration by using capture to assign a printer port to the NetWare printer queue and then send a test file to the printer. The file should be sent to the AS/400 output queue. If it does not arrive at the output queue, check the joblog of the LAN-to-Host job.

10.1.4 Using the EWXSENDF Exit Program

This section describes sending printed output from a NetWare user to an AS/400 user ID in binary or translated mode. You would use binary mode for remote AFPDS printing.

Translation is disabled if you specify a /FORM=BINARY with the NPRINT or the CAPTURE command. First you have to create a form BINARY using the NetWare **PRINTDEF** command.

To do this start the F:\PUBLIC\PRINTDEF program and select *FORMS*. Press the Insert key and create a form called BINARY with the following values:

```
Number = 1
Length = 66
Width  = 80
Width max = 132
```

The following program, SENDF.BAT, will help you set up the right parameters:

```
@ECHO OFF
IF %1.==. GOTO help
IF .%6.==./b. SET form=BINARY
IF .%6.==./B. SET form=BINARY
IF %6.==. SET form=n
IF .%5.==./b. SET form=BINARY
IF .%5.==./B. SET form=BINARY
IF %5.==. SET form=n
IF .%2.==.ITSC. GOTO def1
IF .%2.==.itsc. goto def1
IF .%2.==.SYDNEY.  GOTO def2
IF .%2.==.sydney.  GOTO def2
SET q=%2
SET s=%3
SET na=%4
SET b=%5
GOTO do
:def1
SET q=L2HSENDF
SET s=ITSC
SET na=%3
SET b=%4
GOTO do
:def2
SET q=L2HSENDF
SET s=SYDNEY
SET na=%3
SET b=%4
GOTO do
:DO
IF .%form%.==.BINARY.  nprint %1 /q=%q% /s=%s% /c=1 /na=%na% /b=%b% /form=%form%
IF .%form%.==.n.  nprint %1 /q=%q% /s=%s% /c=1 /na=%na% /b=%b%
@ECHO %1
@ECHO %q%
@ECHO %s%
@ECHO %na%
@ECHO %b%
@ECHO %form%
GOTO EXIT
:HELP
@ECHO
@ECHO]P1 = File Name to be sent.
@ECHO]P2 = NetWare queue name.
@ECHO]P3 = NetWare fileserver owning this queue.
@ECHO]P4 = User ID to send file to.
@ECHO]P5 = Host system to send file to.
@ECHO]P6 = Form type /b for binary (optional).
@ECHO
@ECHO]SENDF P1 P2 P3 P4 P5 P6
@ECHO
@ECHO]P1 = File Name to be sent.
@ECHO]P2 = NetWare queue nickname.
@ECHO]P3 = User ID to send file to.
@ECHO]P4 = Host system to send file to.
@ECHO]P5 = Form type /b for binary (optional).
@ECHO
@ECHO]SENDF P1 P2 P3 P4 P5
@ECHO
```

```
:EXIT
```

10.1.5 USERASCII LAN-to-Host Print (EWXLHASCII)

In order to use the USERASCII REXX procedure, change the supplied version so that it looks like this:

```
/* REXX ***************************************************************/
/*  Module Name:  EWXLHASCII                                          */
/*  Version:  LANRES/400 Version 1.1.0                                */
/*  Platform:  AS/400                                                 */
/*  File Description:  LAN-to-host print *USERASCII exit.             */
/*  User command: NPRINT filename                                     */
/*  MOD B                                                             */
/*  COPYRIGHT -                                                       */
/*    5733-CSA (C) COPYRIGHT IBM CORP. - 1994, 1994                   */
/*    LICENSED MATERIALS - PROPERTY OF IBM                            */
/*    SEE COPYRIGHT INSTRUCTIONS, G120-2083                           */
/*    ALL RIGHTS RESERVED                                             */
/*                                                                    */
/**********************************************************************/
/*--------------------------------------------------------------------*/
/* The data associated with the user exit in the procedures file is  */
/* on the stack.  This value should be  prtlibrary/prtfile,          */
/* an optional printer library followed by printer file              */
pull prtlib '/' prtfile
if prtlib = '' then prtlib = '*LIBL'
if prtlib  <> '' then prtlib  = substr(prtlib,1,10)
if prtfile = '' then prtfile = 'PRT01'
if prtfile <> '' then prtfile  = substr(prtfile,1,10)
/*--------------------------------------------------------------------*/
/* The job configuration from NetWare is also on the queue.  It      */
/* contains all the available information about the print job.       */
/* The fields that are currently being used are:                     */
/* - The job description variable which contains the file name and   */
/*   extension if NPRINT was used or LPTn Capture if CAPTURE was     */
/*   used.  This will be used as the user data for the print file.   */
/* - The copies variable is the number of copies to be printed.      */
/*--------------------------------------------------------------------*/
pull jobconfig
parse var jobconfig,
          juserid,               /* Sending userid          Bytes 80 */
     +80  jclientStation,        /*                                2 */
     +2   jclientTaskNumber,     /*                                2 */
     +2   jclientIDNumber,       /*                                8 */
     +8   jtargetServerIDNumber, /*                                8 */
     +8   jtargetExecutionTime,  /*                               12 */
     +12  jjobEntryTime,         /*                               12 */
     +12  jjobNumber,            /*                                4 */
     +4   jjobType,              /*                                4 */
     +4   jjobPosition,          /*                                2 */
     +2   jjobControlFlags,      /*                                2 */
     +2   jjobFileName,          /*                               24 */
     +24  jjobFileHandle,        /*                               12 */
     +12  jserverStation,        /*                                2 */
     +2   jserverTaskNumber,     /*                                2 */
     +2   jserverIDNumber,       /*                                8 */
     +8   jtextJobDescription,   /* Full file name                84 */
     +84  jcraVersionNumber,     /*                                2 */
     +2   jcraTabSize,           /*                                2 */
     +2   jnotdefinedA,          /*                                2 */
     +2   jcraCopies,            /* Copies to print from nprint    4 */
     +4   jcraFlags,             /*                                4 */
     +4   jcraMaxLinesPerPage,   /*                                4 */
     +4   jcraMaxCharsPerLine,   /*                                2 */
     +2   jcraFormName,          /*                               22 */
     +22  jcraReserved,          /*                               14 */
     +14  jnotdefinedC,          /*                                2 */
     +2   jcraBannerName,        /* Banner name from nprint       22 */
     +22  jcraBannerFile,        /* Banner file from nprint       22 */
     +22  jcraHeaderFile,        /*                               24 */
     +24  jcraDirectoryPath,     /*                              134 */
     +134 .
```

```
usrdata = left(jtextJobDescription,10)
copies = x2d(jcraCopies)

/*-----------------------------------------------------------------*/
/* Use OVRPRTF to set the userdata and number of copies, then use   */
/* CPYF to print the data.                                          */
/*-----------------------------------------------------------------*/
RC = 0
'OVRPRTF FILE(*PRTF) COPIES(&copies) USRDTA(&usrdata)'
if RC = 0 then

          'DLTF       FILE(QTEMP/PRINT) '
          'CRTPF      FILE(QTEMP/PRINT) RCDLEN(128) SIZE(1000000 10000 20)'
'CPYF FROMFILE(QTEMP/EWXPCDATA) TOFILE(QTEMP/DA) MBROPT(*REPLACE) CRTFILE(*YES)'
          'CALL       PGM(QLANRES/COPY)'
  'CPYF FROMFILE(QTEMP/PRINT) TOFILE(&prtlib/&prtfile)'
/*-----------------------------------------------------------------*/
/* Push a message and set the exit code depending on our success.   */
/*-----------------------------------------------------------------*/
if RC = 0 then
  do
  push 'Print file' usrdata 'queued to printer.'
  exitrc = 0
  end
else
  do
  push 'Printing of file' usrdata 'failed.'
  exitrc = 8
  end
exit exitrc
```

In the REXX procedure you use an RPG program to copy the data. Create the program COPY in library QLANRES as shown in Figure 105.

```
 FMT F  .....FFilenameIPEAF....RlenLK1AIOvKlocEDevice+......KExit+
        *************** Beginning of data ************************
0001.00      FDA      IP  F    4096            DISK
0002.00      FPRINT   O   F     128            DISK
0002.01      E                    FLD        32128
0003.00      IDA      KF  01
0004.00      I                                       14096 FLD
0007.00      C           1         DO   32        I       20
0007.01      C                     MOVE FLD,I     PR    128
0007.02      C           PR        IFNE *BLANKS
0007.03      C                     EXCPT
0007.04      C                     ENDIF
0008.00      C                     ENDDO
0009.00      OPRINT   E        01
0010.00      O                          PR       128
        ****************** End of data ***************************
```

Figure 105. RPG COPY Program

10.1.6 AFPDS LAN-to-Host Printing

This section describes creating a user defined exit program to enable you to send printed output to an AS/400 advanced function printing printer. To use this exit program, you need to install an AFPDS printer driver on the client. PC Support/400 or PSF/2 have these drivers for both Windows and OS/2.

The following is the source of the exit procedure:

```
/* REXX ************************************************************/
/*  Module Name:  AFPDS-ASCII                                     */
/*  Version:  LANRES/400 Version 1.1.0                            */
/*  Platform:  AS/400                                             */
/*  File Description:  LAN-to-host print AFPDS exit.              */
/*  User command: Windows or OS/2 print with an AFPDS driver      */
/*                                                                */
/*  COPYRIGHT -                                                   */
/*              (C) COPYRIGHT IBM CORP. - 1994, 1994              */
/*    LICENSED MATERIALS - PROPERTY OF IBM                        */
/*    SEE COPYRIGHT INSTRUCTIONS, G120-2083                       */
/*    ALL RIGHTS RESERVED                                         */
/*                                                                */
/******************************************************************/
/*                                                                */
/*  To  configure the AS/400 to use this EXIT pgm use the:        */
/*                                                                */
/*                        WRKLRLHPP  CMD                          */
/*----------------------------------------------------------------*/
/*                     LAN Print Procedure                        */
/*                                                                */
/*    Print queue . . . . . . :   L2HQ   < File server Queue      */
/*    Routine type  . . . . . :   *REXX                           */
/*    File or program . . . . :   SAMPLES                         */
/*      Library . . . . . . . :     QLANRES                       */
/*    Member  . . . . . . . . :   AFPDS   < this File             */
/*    Parameters  . . . . . . :   Printer/AS400queu/Lib           */
/*                                                                */
/*    Printer = AS400 printer devd which has AFPDS = *YES         */
/*    AS400queu and LIB = AS400 outq where you want to receive    */
/*                        the spoolfile.                          */
/*----------------------------------------------------------------*/
/* The data associated with the user exit in the procedures file is  */
/* on the stack.  This value should be the printer name.            */
/*----------------------------------------------------------------*/
pull  P '/' O '/' L
if P  <> '' then PRT  = substr(P,1,10)
if P  =  '' then PRT  = 'PRT01'
if O  <> '' then OUTQ = substr(O,1,10)
if O  =  '' then OUTQ = PRT
if L  <> '' then LIB  = substr(L,1,10)
if L  =  '' then LIB  = '*LIBL'
/*----------------------------------------------------------------*/
/* The job configuration from NetWare is also on the queue.  It     */
/* contains all the available information about the print job.      */
/* The fields that are currently being used are:                    */
/* - The job description variable which contains the file name and  */
/*   extention if NPRINT was used or LPTn Capture if CAPTURE was    */
/*   used.  This will be used as the user data for the print file.  */
/* - The copies variable is the number of copies to be printed.     */
/*----------------------------------------------------------------*/
pull jobconfig
parse var jobconfig,
          juserid,               /* Sending userid         Bytes 80 */
     +80  jclientStation,        /*                               2 */
     +2   jclientTaskNumber,     /*                               2 */
     +2   jclientIDNumber,       /*                               8 */
     +8   jtargetServerIDNumber, /*                               8 */
     +8   jtargetExecutionTime,  /*                              12 */
     +12  jjobEntryTime,         /*                              12 */
     +12  jjobNumber,            /*                               4 */
     +4   jjobType,              /*                               4 */
     +4   jjobPosition,          /*                               2 */
     +2   jjobControlFlags,      /*                               2 */
     +2   jjobFileName,          /*                              24 */
     +24  jjobFileHandle,        /*                              12 */
     +12  jserverStation,        /*                               2 */
     +2   jserverTaskNumber,     /*                               2 */
     +2   jserverIDNumber,       /*                               8 */
     +8   jtextJobDescription,   /* Full file name               84 */
     +84  jcraVersionNumber,     /*                               2 */
     +2   jcraTabSize,           /*                               2 */
     +2   jnotdefinedA,          /*                               2 */
     +2   jcraCopies,            /* Copies to print from nprint   4 */
     +4   jcraFlags,             /*                               4 */
```

```
     +4   jcraMaxLinesPerPage,   /*                              4 */
     +4   jcraMaxCharsPerLine,   /*                              2 */
     +2   jcraFormName,          /*                             22 */
     +22  jcraReserved,          /*                             14 */
     +14  jnotdefinedC,          /*                              2 */
     +2   jcraBannerName,        /* Banner name from nprint    22 */
     +22  jcraBannerFile,        /* Banner file from nprint    22 */
     +22  jcraHeaderFile,        /*                             24 */
     +24  jcraDirectoryPath,     /*                            134 */
     +134 .
/*-------------------------------------------------------------------*/
/* Use CHGJOB  to set PRINTER AND OUTQ                               */
/*-------------------------------------------------------------------*/
 'CHGJOB     PRTDEV(&PRT) OUTQ(&LIB/&OUTQ) PRTTXT(*BLANK)'
/*-------------------------------------------------------------------*/
/* Use OVRDBF  to set LevelCheck for the File to *NO                 */
/*-------------------------------------------------------------------*/
 'OVRDBF     FILE(EWXPCDATA) TOFILE(*FILE) LVLCHK(*NO)'
/*-------------------------------------------------------------------*/
/* Use PRTAFPDTA to print the APFPDS Data from the server to priner  */
/*-------------------------------------------------------------------*/
 'PRTAFPDTA  FILE(QTEMP/EWXPCDATA) DEV(*JOB) FORMDF(*INLINE) FIDELITY(*CONTENT)'
/*-------------------------------------------------------------------*/
/* Push a message and set the exit code depending on our success.    */
/*-------------------------------------------------------------------*/
if RC = 0 then
   do
   push 'LANRES/400 AFPDS Data queued to printer.'
   exitrc = 0
   end
else
   do
   push 'Printing of LANRES/400 AFPDS Data failed.'
   exitrc = 8
   end
exit exitrc
```

To use the exit procedure follow these steps:

1. Create a NetWare print server as follows:

   ```
   CRTNWPRTS PRTSRV(L2HP#AFP)
   ```

2. Next, create a NetWare print queue:

   ```
   CRTNWPRTQ PRTQ(L2HQ#AFP) PRTSRV(L2HP#AFP).
   ```

3. Now add these values to the LAN Print Procedures file as shown in Figure 106.

```
                              LAN Print Procedure
 Print queue . . . . . . :   L2HQ#AFP
 Routine type  . . . . . :   *REXX
 File or program . . . . :   SAMPLES
   Library . . . . . . . :     QLANRES
 Member  . . . . . . . . :   AFPDS
 Parameters  . . . . . . :   PRTO6/MYQUEUE/MYLIB
```

Figure 106. Adding a User Exit Program to the LAN print Procedures File

Note that in the parameters for the LAN Print Procedures, you have to specify an AS/400 printer device name that has AFP(*YES) in its description.

4. Make sure you have loaded the EWXLHPRT module on the NetWare server and then start the LAN-to-Host connection on the AS400 with the following command:

   ```
   SBMJOB CMD(STRLRLHPRT QS(L2HQ#AFP) PROTOCOL(*APPC) TARGET(SYDNEY)
   PWIN(ITSC) PWOUT(ITSC)) JOB(L2H#AFP) LOG(4 OO *SECLVL)
   ```

5. On the client side you need first to install an AFPDS printer driver for Windows or OS/2. Then you can capture a printer port, specifying the output queue L2HQ#AFP as follows:

```
CAPTURE /L2 /Q=L2HQ#AFP /NO BANNER /NO FORMFEED /NO TABS
```

Tips

Make sure you select the right target printer on the IBMAFP driver configuration panel. The data stream is very device dependent, so choose a specific driver only if you have the printer connected. Otherwise use the generic printer driver.

Use *Print File* only for the *IBMAFP driver output* parameter in the job properties.

Use only TrueType** or ATM fonts.

10.1.6.1 AFPDS REXX User Exit Program

The following shows the source of the AFPDS REXX user exit program that we described in the previous section.

```
/* REXX ***************************************************************/
/*  Module Name:  AFPDS-ASCII                                         */
/*  Version:  LANRES/400 Version 1.1.0                                */
/*  Platform:  AS/400                                                 */
/*  File Description:  LAN-to-host print AFPDS  exit.                 */
/*  User command: Windows or OS/2 print  with  an AFPDS driver        */
/*                                                                    */
/*  COPYRIGHT -                                                       */
/*              (C) COPYRIGHT IBM CORP. - 1994, 1994                  */
/*    LICENSED MATERIALS - PROPERTY OF IBM                            */
/*    SEE COPYRIGHT INSTRUCTIONS, G120-2083                           */
/*    ALL RIGHTS RESERVED                                             */
/**********************************************************************/
/*  To  configure the AS/400 to use this EXIT pgm use the:            */
/*                        WRKLRLHPP  CMD                              */
/*--------------------------------------------------------------------*/
/*                     LAN Print Procedure                            */
/*                                                                    */
/*    Print queue . . . . . . :   L2HQ   <===  File server Queue      */
/*    Routine type  . . . . . :   *REXX                               */
/*    File or program . . . . :   SAMPLES                             */
/*      Library . . . . . . . :     QLANRES                           */
/*    Member  . . . . . . . . :   AFPDS   <===  this File             */
/*    Parameters  . . . . . . :   Printer/AS400que/Lib                */
/*                                                                    */
/*    Printer = AS400 printer devd which has AFPDS = *YES             */
/*    AS400que and LIB = AS400 outputqueue where you want to receive */
/*                        the spoolfile.                              */
/*--------------------------------------------------------------------*/
/* The data associated with the user exit in the procedures file is  */
/* on the stack. This value should be the printer name, Queue, Lib   */
/*--------------------------------------------------------------------*/
pull  P '/' O '/' L
if P  <> '' then PRT  = substr(P,1,10)
if P  =  '' then PRT  = 'PRT01'
if O  <> '' then OUTQ = substr(O,1,10)
if O  =  '' then OUTQ = PRT
if L  <> '' then LIB  = substr(L,1,10)
if L  =  '' then LIB  = '*LIBL'
/*--------------------------------------------------------------------*/
/* The job configuration from NetWare is also on the queue.  It      */
/* contains all the available information about the print job.       */
/* The fields that are currently being used are:                     */
/* - The job description variable which contains the file name and   */
/*   extention if NPRINT was used or LPTn Capture if CAPTURE was     */
/*   used.  This will be used as the user data for the print file.   */
/* - The copies variable is the number of copies to be printed.      */
/*--------------------------------------------------------------------*/
```

```
pull jobconfig
parse var jobconfig,
          juserid,               /* Sending userid          Bytes 80 */
     +80  jclientStation,        /*                                2 */
     +2   jclientTaskNumber,     /*                                2 */
     +2   jclientIDNumber,       /*                                8 */
     +8   jtargetServerIDNumber, /*                                8 */
     +8   jtargetExecutionTime,  /*                               12 */
     +12  jjobEntryTime,         /*                               12 */
     +12  jjobNumber,            /*                                4 */
     +4   jjobType,              /*                                4 */
     +4   jjobPosition,          /*                                2 */
     +2   jjobControlFlags,      /*                                2 */
     +2   jjobFileName,          /*                               24 */
     +24  jjobFileHandle,        /*                               12 */
     +12  jserverStation,        /*                                2 */
     +2   jserverTaskNumber,     /*                                2 */
     +2   jserverIDNumber,       /*                                8 */
      +8   jtextJobDescription,   /* Full file name                84 */
      +84  jcraVersionNumber,     /*                                2 */
      +2   jcraTabSize,           /*                                2 */
      +2   jnotdefinedA,          /*                                2 */
      +2   jcraCopies,            /* Copies to print from nprint    4 */
      +4   jcraFlags,             /*                                4 */
      +4   jcraMaxLinesPerPage,   /*                                4 */
      +4   jcraMaxCharsPerLine,   /*                                2 */
      +2   jcraFormName,          /*                               22 */
      +22  jcraReserved,          /*                               14 */
      +14  jnotdefinedC,          /*                                2 */
      +2   jcraBannerName,        /* Banner name from nprint       22 */
      +22  jcraBannerFile,        /* Banner file from nprint       22 */
      +22  jcraHeaderFile,        /*                               24 */
      +24  jcraDirectoryPath,     /*                              134 */
      +134 .
 /*-----------------------------------------------------------------*/
 /* Use CHGJOB  to set PRINTER AND OUTQ                             */
 /*-----------------------------------------------------------------*/
  'CHGJOB     PRTDEV(&PRT) OUTQ(&LIB/&OUTQ) PRTTXT(*BLANK)'
 /*-----------------------------------------------------------------*/
 /* Use OVRDBF  to set LevelCheck for the File to *NO               */
 /*-----------------------------------------------------------------*/
   'OVRDBF     FILE(EWXPCDATA) TOFILE(*FILE) LVLCHK(*NO)'
 /*-----------------------------------------------------------------*/
 /* Use PRTAFPDTA to print the AFPDS Data from the server to printer P*/
 /*-----------------------------------------------------------------*/
  'PRTAFPDTA  FILE(QTEMP/EWXPCDATA) DEV(*JOB) FORMDF(*INLINE) FIDELITY(*CONTENT)'
 /*-----------------------------------------------------------------*/
 /* Push a message and set the exit code depending on our success.   */
 /*-----------------------------------------------------------------*/
 if RC = 0 then
    do
    push 'LANRES/400 AFPDS Data queued to printer.'
    exitrc = 0
    end
 else
    do
    push 'Printing of LANRES/400 AFPDS Data failed.'
    exitrc = 8
    end
 exit exitrc
```

10.2 LANRES/400 Host-to-LAN Print

The LANRES/400 print function allows AS/400 output to be sent to printers attached to the NetWare server. Most AS/400 output can be printed with the exception of AFPDS and IPDS data streams.

Host-to-LAN printing is implemented by having a program running on the AS/400 that monitors an output queue. Printing sent to that output queue, is processed by the LANRES/400 print server according to the exit program specified and then

redirected to a NetWare printer queue. With the most commonly used exit program, EWXHSCS, the AS/400 host print transform function processes and converts the data to ASCII. This has the advantage that many IBM and non-IBM printers are predefined, for a list of printers see page 258.

Host-to-LAN printing allows to send output from multiple AS/400 output queues (also with different data types) to a single NetWare printer. The printer does not have to be dedicated to LANRES/400 printing, so other NetWare users can share a printer that is being accessed by LANRES/400 Host-to-LAN printing.

The three exit programs supplied with LANRES/400 are:

1. EWXHASCI

   This exit program does not change the AS/400 print data and is only used when the AS/400 print data is already in ASCII format. It could be used if the file was generated by TCP/IP, by PC Support/400 Virtual Print Option 2, or by an AS/400 program. To use this exit program, the spooled file has to have the printer device type *USERASCII.

2. EWXHLINE

   This exit program translates AS/400 print data from EBCDIC to ASCII and supports ANSI carriage control characters that are used to indicate new pages and lines. This exit program is useful for printing output that originates on a IBM S/390 or S/370 system.

3. EWXHSCS

   This exit program uses the AS/400 host print transform function to convert SNA Character Stream (SCS) data to ASCII. This is the exit program that you would use for most printed output on the AS/400. You can not use this exit program to print an SCS spooled file which includes ASCII data by means of the ASCII transparency command of SCS (X'03').

10.2.1.1 Host-to-LAN AS/400 and NetWare Objects

Since there are many different objects, printer queues and servers involved in Host-to-LAN printing, Figure 107 shows how all the objects are related.

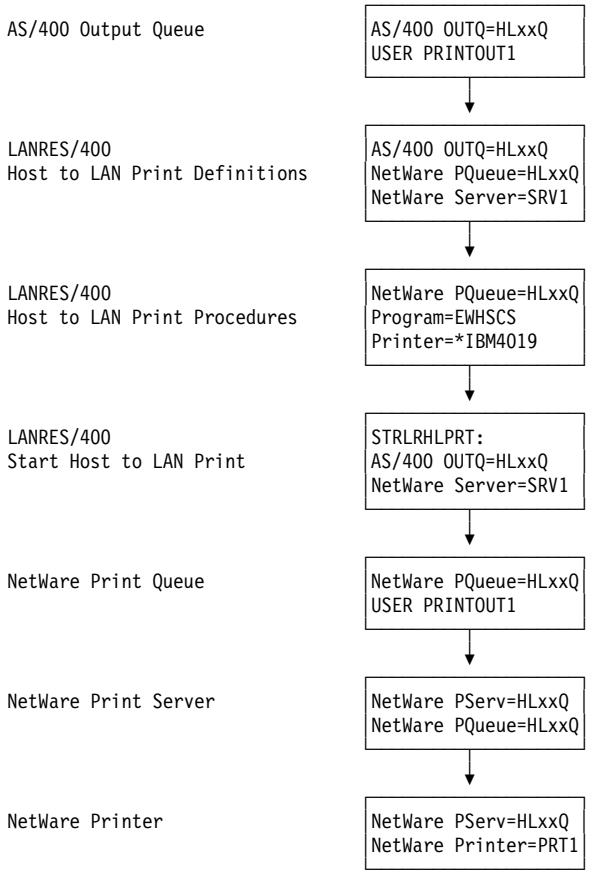

Figure 107. LANRES/400 Host-to-LAN Objects

You create an AS/400 output queue and then define that queue in the LANRES/400 Host to LAN Print Definitions file, specifying its associated NetWare server and print queue.

Next, you configure the Host-to-LAN Print Procedures file, adding the NetWare print queue name and the target ASCII printer type. Here you specify the conversion program - which converts the data on the AS/400.

You then start the Host-to-LAN print function as a batch job, specifying the AS/400 output queue name and the target NetWare server.

You would have already loaded PSERVER.NLM the EWXHLPRT.NLM on the NetWare server. The printed output is sent to the NetWare print queue, then to the NetWare print server and finally to a printer.

Next you start the Host-to-LAN print server on the AS/400, submitted as a batch job.

Note that when you have AS/400 batch jobs running for print serving, they remain active when/if the server is restarted. In this case, the print functions of LANRES/400 can be automatically restarted.

10.2.2 Host-to-LAN Print Commands

Table 20 shows the LANRES/400 commands for Host-to-LAN printing and their NetWare equivalents.

Table 20. Equivalent LANRES/400 and NetWare Commands for LAN-to-Host Printing

LANRES/400	NetWare	Description	Menu (Option)
CRTNWPRTQ *	PCONSOLE	Creates a NetWare print queue	LRPRTFILE (1)
CRTNWPRTS *	PCONSOLE	Creates a NetWare print server	LRPRTFILE (4)
DLTNWPRTS *	PCONSOLE	Deletes a NetWare print server	LRPRTFILE (6)
DLTNWPRTQ *	PCONSOLE	Deletes a NetWare print queue	LRPRTFILE (3)
DSPNWPRTF		Displays the status of files that were sent to a NetWare attached printer	LRPRTFILE (2)
ENDLRJOB		Ends LANRES/400 jobs;stops the LANRES/400 job running on the AS/400	
PRTFNW		Prints an AS/400 file on a NetWare printer	LRPRTFILE (1)
RNMNWPRTS *	PCONSOLE	Renames a NetWare print server	LRPRTFILE (5)
RNMNWPRTQ *	PCONSOLE	Renames a NetWare print queue	LRPRTFILE (2)
STRLRLHPRT		Starts Host-to-LAN print server running on the AS/400	Used with SBMJOB
WRKLRHLPD		Lets you work with the settings in the print definitions configuration file	LRCONFIG (5)
WRKLRHLPP		Lets you work with the settings in the print procedures configuration file	LRCONFIG (6)

Note: All commands marked with an asterisk (*) are considered to be administration commands, because you have to be connected to the server using the LANRES/400 administration function to use them.

10.2.3 Host-to-LAN Printing Example using EWXHSCS

This section provides and example of configuring Host-to-LAN printing to send a printed output from an AS/400 output queue, H2LSCS, to a NetWare printer queue called RSTSCS.

1. First, create an AS/400 output queue with the following command. This output queue should not be linked to an active print writer.

   ```
   CRTOUTQ H2LSCS
   ```

2. Now use the following LANRES/400 command from the AS/400 to create a NetWare print server, for this example we called ours RST4029.

   ```
   CRTNWPRTS
   ```

3. Use the following LANRES/400 command to create a NetWare print queue.

   ```
   CRTNWPRTQ
   ```

   We created our print queue as RSTSCS and linked it to the print server RST4029.

4. Now use the following command to create a record in the LANRES/400 print definition file. The default file is QUSRSYS/QLANRESPRT, and the default member is HLDEFS. This command displays the screen shown in Figure 108.

   ```
   WRKLRHLPD
   ```

```
                          Work with Host Prt Definitions

File . . . . . . . . :   QLANRESPRT      Member . . . . . . . :   HLDEFS
  Library  . . . . . :     QUSRSYS

Type options, press Enter.
  1=Add   2=Change   4=Remove   5=Display

        AS/400          Queue
Opt     Queue           Library
 1      H2LSCS   .      ITSCLAN
 _      H2L             QUSRSYS
 _      H2LASCII        ITSCLAN
 _      H2LLINE         ITSCLAN
 _      JUSTINE         ITSCLAN


                                                                      Bottom
Command
===> ____________________________________________________________________________
F3=Exit   F4=Prompt   F9=Retrieve   F12=Cancel
```

Figure 108. Adding a Host Print Definition

Select option 1 and, at the same time, enter the AS/400 output queue and library name. When you press Enter the screen shown in Figure 108 is displayed.

This entry links the AS/400 output queue with the **NetWare server** name (not the NetWare print server name). It is a very common error to specify the NetWare print server here instead of correctly specifying the NetWare server name.

```
                             Host Print Definition

AS/400 queue  . . . . . :   H2LSCS
  Library . . . . . . . :     ITSCLAN
Print queue . . . . . . .   RSTSCS
Print server  . . . . . .   ITSC
ASCII conversion  . . . .   *YES
Notify when complete  . .   *YES


Press Enter to continue

F3=Exit   F12=Cancel
```

Figure 109. Adding a Host Print Definition

If the value for *Notify when complete* is set to *NO, a message will be put into a user's message queue when a file for printing is sent to the server printer queue.

5. If the value for **Notify when complete** is set to ***YES**, a second message will be sent when the file is printed.
6. Now you need to add an entry in the *Host Print Procedures* file (the default is QUSRSYS/QLANRESPRT). Here you specify the exit program to be used to process the data as shown in Figure 110.

```
                          Work with Host Prt Procedures

 File . . . . . . . . . :   QLANRESPRT      Member . . . . . . . :   HLPROCS
   Library  . . . . . :     QUSRSYS

 Type options, press Enter.
   1=Add   2=Change   4=Remove   5=Display

 Opt     Queue
  1      RSTSCS
  _      ASCII
  _      ITSCH2L
  _      LINE
  _      SCS


                                                                      Bottom
 Command
 ===>
 F3=Exit   F4=Prompt   F9=Retrieve   F12=Cancel
```

Figure 110. Adding a Host Print Procedures Entry

7. Select option 1 and, at the same time, enter the AS/400 output queue and library name. When you press Enter the screen shown in Figure 111 is displayed.

```
                              Host Print Procedure

 Print queue . . . . . . :   RSTSCS
 Routine type  . . . . . .   *PGM
 File or program . . . . .   EWXHSCS
   Library . . . . . . . .     QLANRES
 Member  . . . . . . . . .
 Parameters  . . . . . . .   *IBM4029


 Press Enter to continue

 F3=Exit   F12=Cancel
```

Figure 111. Specifying a Host Print Procedure Entry

Here we specified the exit program EWXHSCS, so that the data will be converted from SCS to ASCII by the host print transform function. You also have to specify the target printer type, it our case we were using an IBM 4029 printer on the server.

8. Many other IBM and non-IBM printers are defined for the host print transform function. See the tables on page 141 for a list of the printers supported.

   If the printer you are using is not listed here, or cannot emulate one of these printers, you can to create your own workstation customization object.

9. For this example we assume that you have already loaded the LANRES/400 object and the EWXHLPRT.NLM on the server. If you are using Host-to-LAN printing for more than one printer, you need to load the NLM once for each AS/400 output queue. The LANRES/400 object only needs to be loaded once during the installation process; it does not have to be loaded each time you use Host-to-LAN printing.

10. You now need to start the Host-to-LAN print server on the AS/400. Use the following command and F4 and you will be prompted with the screen shown in Figure 112.

```
SBMJOB STRLRHLPRT
```

```
                    Start LANRES Host-to-LAN Print (STRLRHLPRT)        Level: 2

 Type choices, press Enter.

 Timeout  . . . . . . . . . . . . .   *DFT
 Output queue . . . . . . . . . . . > H2SCS       Name
   Library  . . . . . . . . . . . . >   ITSCLAN    Name, *CURLIB, *LIBL
 Retries  . . . . . . . . . . . . .   *DFT
 Nickname . . . . . . . . . . . . .   ____________________________________________
_____
 Communication protocol . . . . . .   *APPC        *APPC, *TCPIP
 Communication target . . . . . . .   ITSC
_____________________________________
 PWIN . . . . . . . . . . . . . . .   ITSC        Character value
 PWOUT  . . . . . . . . . . . . . .   ITSC        Character value
 Password file  . . . . . . . . . .   __________  Name
   Library  . . . . . . . . . . . .     *LIBL     Name, *CURLIB, *LIBL
 Member . . . . . . . . . . . . . .   __________  Name
 Logging  . . . . . . . . . . . . .   *OFF        *ON, *OFF

                                                                          Bottom
 F3=Exit   F4=Prompt   F5=Refresh   F10=Additional parameters   F12=Cancel
 F13=How to use this display        F24=More keys
```

Figure 112. Starting the Host-to-LAN Print Job

11. Press **Enter** and **F10** for additional parameters and change the following parameters to help you with recognizing the job name and to ensure error messages are sent to the joblog.

```
JOB(H2LSCS)
LOG(4 00 *SECLVL)
```

12. Once you have entered this command, the server job should start in the QBATCH subsystem. Now, any printed output sent to the H2LSCS output queue will be redirected to the NetWare printer queue.

Appendix A. Advanced Function Printer Utilities/400 Enhancements in V3R1

Several enhancements have been added to the Advanced Function Printer Utilities/400 (AFPU/400) product for V3R1. These enhancements include the following:

- Additional support for new printers
- Additional functional enhancements
- Usability enhancements

A.1 Additional Support for New Printers

Several new printers have been added to the Define Overlay Specification and Define Printout Format Definition (PFD) Specification panels. These panels are used to tell AFPU/400 what type of printer you will be using to print your output. The new printers that have been added are:

- The IBM 3916 printer (use this value for the IBM 3912 printer also)
- The IBM 3935 printer
- The IBM 3829 printer

```
                        Define Overlay Specifications

 Type choices, press Enter.

   Printer type . . . . . . . .   7         1=4224/4230/4234
                                            2=3812/3816/3930
                                            3=3916/4028
                                            4=3820/3825/3827/3829/3835/3900
                                            5=3825/3835/3900(image capable)
                                            6=3831
                                            7=3935
                                            9=Not specified
   Characters per inch  . . . .   10.00     5.00, 10.00, 12.00, 13.30, 15.00
                                            16.70, 18.00, 20.00
   Lines per inch . . . . . . .   6.00      3.00, 4.00, 6.00, 7.50, 8.00, 9.00
                                            12.00
   Unit of measure  . . . . . .   1         1=Inch, 2=Centimeter
   Size:
     Measurement method . . . .   1         1=Row/Column, 2=Inch/Centimeter
     Width  . . . . . . . . . .   80        1-999
     Height . . . . . . . . . .   60        1-999
                                                                      More...
 F3=Exit   F5=Refresh   F12=Cancel
```

Figure 113. Define Overlay Specifications

Another change which has been made in order to take advantage of new function in the IBM 3935 printer allows you to specify which output bin you would like to use. Since the IBM 3935 has two output stackers, it is now possible on the Print Database File Member and Print PFD Data (PRTPFDDTA command) panels to specify whether to use a specific output bin (1-65535) or use the device default output bin (*DEVD).

```
                          Print PFD Data (PRTPFDDTA)

 Type choices, press Enter.

 PFD file . . . . . . . . . . . .                Name
   Library  . . . . . . . . . . .     *LIBL      Name, *LIBL, *CURLIB
 PFD definition . . . . . . . . .   *FIRST       Name, *FIRST
 Database file  . . . . . . . . .   *PFD         Name, *PFD
   Library  . . . . . . . . . . .                Name, *LIBL, *CURLIB
 Member . . . . . . . . . . . . .   *FIRST       Name, *FIRST
 Include grid . . . . . . . . . .   *NO          *YES, *NO
 Record selection . . . . . . . .   *YES         *YES, *NO
 Ending page  . . . . . . . . . .   *END         1-9999, *END
 Source drawer  . . . . . . . . .   *PFD         1-255, *PFD, *E1, *CUT
 Output bin . . . . . . . . . . .   *DEVD        1-65535, *DEVD
 Copies . . . . . . . . . . . . .   *PFD         1-255, *PFD
 Output queue . . . . . . . . . .   *JOB         Name, *JOB
   Library  . . . . . . . . . . .                Name, *LIBL, *CURLIB
                                                                   Bottom
 F3=Exit   F4=Prompt   F5=Refresh   F12=Cancel   F13=How to use this display
 F24=More keys
```

Figure 114. Print PFD Data

Additional support was also added for the IBM 3935 printer in order to take advantage of the scalable monospaced fonts with Font Identifier numbers (FGIDs) between 300 and 511. Previously, only typographic fonts could have a point size specified and be scalable.

Finally, support was added to ensure that when using the IBM 3935 printer and a CODE128 barcode, that you specify check digit *YES. The IBM 3935 printer does not support the CODE128 barcode without a check digit.

A.2 Additional Functional Enhancements

The number of total repetitions of a record layout on a page layout when creating or changing your PFDs has been expanded from 99 to 999. Because this change was made very late in V3R1, the expanded limit is not documented in the *AFP Utilities/400 - Version 3* manual, SC41-3640. In addition, the message `AFP12A0 - Repetition number greater than 99`, incorrectly states that the limit is 99 instead of 999.

The range for Font Identifiers, when specifying Font and Character identifiers, has also been expanded from 1-65279 to 1-65535. This allows you to make use of an additional font range that is used for user defined fonts. This change was made on the Define Source Overlay Font, Change Source Overlay Font, Define PFD Definition Font, and Change PFD Definition Font panels.

```
                          Change Source Overlay Font

 Font number  . . . . . . . . . :   1
 Font type  . . . . . . . . . . :   1          Font and character identifier

 Type choices, press Enter.

   Font:
     Identifier . . . . . . . .   11         1-65535
     Point size . . . . . . . .   *NONE      0.1-999.9, *NONE
   Character identifier:
     Graphic character set  . .   *SYSVAL    1-32767, *SYSVAL
     Code page  . . . . . . . .               1-32767
   Text 'description' . . . . .   10 CPI Courier

 F3=Exit   F5=Refresh   F12=Cancel
```

Figure 115. Change Source Overlay Font

Changes have been made to allow greater flexibility in selecting the source drawer for your printed output. The Define Printout Specification, the Print Database File Member, and the Print PFD Data (PRTPFDDTA) command now allow the source drawer to be either a drawer number (1-255), the envelope drawer (*E1), or the manual feed (*CUT). In addition, the Print Database File Member and Print PFD Data panels allow an additional drawer selection of *PFD which indicates that the value specified in the PFD Printout Specifications be used. See Figure 114 on page 262 for an example of these changes.

A.3 Usability Enhancements

The *AFP Utilities/400 - Version 3* manual, SC41-3640, has been edited in order to improve the readability of the material. In addition, the AFPU/400 help text has been improved to provide better online information about the product.

Appendix B. Enhancements to the AFP to ASCII Transform

The QWPZTAFP API provides a method for transforming an AFP spooled file into an ASCII spooled file. This would be useful to anyone that produces AFP output and would like the option to send this output to an ASCII printer such as an IBM 4039 or an HP LaserJet.

The QUSRTOOL library contains a tool called TRNAFP that gives an example of how to use the Transform AFP to ASCII API.

This API became available with Version 2.0 Release 3.0 but it has received several enhancements in Version 3.0 Release 1.0.

In this appendix we will discuss the following:

- Brief description of the API
- The enhancement to the API in Version 3.0 Release 1.0
- Brief description of the TRNAFP tool
- Details on how to create the TRNAFP tool

B.1 The QWPZTAFP API

The Transform AFP to ASCII API (QWPZTAFP) converts an AFPDS data stream into an ASCII data stream. The ASCII data stream can be formatted for one of the following printers:

- IBM LaserPrinter 4019 in PPDS mode
- IBM LaserPrinter 4029 in PPDS mode
- HP LaserJet II or compatible (for example, an IBM 4019 in HP emulation mode)
- HP LaserJet III
- IBM Personal Page Printer (4216-30 or 31) in HP emulation mode
- Any printer in PostScript mode

There is also a text-only data stream option. The ASCII data stream for this option will only contain text, carriage return, and line feed controls. This option can be used to print the text data of the spooled file to a dot-matrix printer.

The following AFP data stream objects can be transformed by the Transform AFP to ASCII API:

- Document
- Presentation Page
- Presentation Text data
- Presentation Text 2 (PT2) data
- IM Image data
- IO (IOCA) Image data
- Overlay Resources

- Page Segment Resources

Support for Image Object Content Architecture (IOCA) and Presentation Text 2 (PT2) objects is the new function available with Version 3.0 Release 1.0.

IOCA image commands specify a raster image and its placement in a page segment, overlay or logical page. The Transform AFP to ASCII API supports all of the features of IOCA images, including:

- Trimming the image
- Scaling to fit
- Image data compression

Prior to Version 3.0 Release 1.0, the transform could only process IM image.

Presentation Text 2 commands include:

- Overstrike
- Temporary baseline move (for superscript and subscript)
- Underscore

With this enhancement the Transform AFP to ASCII API supports all of the AFPDS text controls.

AFP commands that cannot be processed will be skipped over and you will not receive any warning or error messages.

B.1.1 Limitations

The following is a list of the unsupported AFP data stream objects and limitations of this transform.

- Graphic data (GOCA) commands cannot be processed.
- Bar code (BCOCA) commands cannot be processed.
- Double-Byte Character Set (DBCS) fonts cannot be processed.
- Only the source selector field of the Medium Map Print-Control object will be processed.
- The transform will map as best it can the requested fonts to those supported by the ASCII printers. Nevertheless, typeface, style, and character spacing may appear different than the same job printed on a true AFP printer.
- One user space is used for input data and one user space for output data. This means that the transform can process a maximum of 16MB of input data and produce a maximum of 16MB of output (the maximum size of a user space). If the ASCII data stream generated by the transform is larger than 16MB, the transform will place as much of the data stream as it can into the user space and return an error message.
- Only portrait orientation is supported when printing to HP LaserJet II printers or compatible printers.

B.2 The Transform AFP Spooled File to ASCII Spooled File Tool

The Transform AFP Spooled File to ASCII Spooled File tool (ZTRNAFP) provides the user with a simple to use example of how to make use of the QWPZTAFP API. The tool performs the following steps:

- Allows the user to issue a command, specifying various parameters, such as the device type of the target ASCII printer.
- Retrieves the AFP data stream from a spooled file with a device type of *AFPDS.
- Calls the Transform AFP to ASCII API (QWPZTAFP) passing the parameter values specified by the user.
- Writes the ASCII data stream returned by the API to a spooled file with a device type of *USERASCII.

B.2.1 Creating the Transform AFP Spooled File to ASCII Spooled File Tool

The transform tool can be created by performing the following steps:

1. Create a library for the installation program.

   All tools in the QUSRTOOL library come with source code for an installation program. Create a library where you want the installation program placed. This will be referred to as *crt-lib* in the following steps. If an existing library is used, this step can be skipped.

2. Create a tool library.

   Create a library where you want the parts of the tool, created by the installation program, to be placed. This will be referred to as *tool-lib* in the following steps. If an existing library is used, this step can be skipped.

3. Add the tool-lib to your library list.

4. Create the installation program TWPINST

   The source code for the installation program TWPINST can be found in the file QATTCL in library QUSRTOOL. This is a CL program and can be created with the following command:

   ```
   CRTCLPGM PGM(crt-lib/TWPINST) SRCFILE(QUSRTOOL/QATTCL)
   ```

5. Run the TWPINST program.

   Running the installation program will create all of the parts needed for the tool. Enter the following command to run the installation program:

   ```
   CALL PGM(crt-lib/TWPINST) PARM(tool-lib)
   ```

   If the tool object already exists in the tool library, the existing object will be replaced.

B.2.2 Using the Transform AFP Spooled File to ASCII Spooled File Tool

To transform an AFP spooled file into an ASCII spooled file, use the tool command ZTRNAFP. An example of the prompt screen for this command can be seen in Figure 116 on page 268. Following this example, we describe the possible values for each of the parameters.

```
                         Transform AFP file (ZTRNAFP)

 Type choices, press Enter.

 Spooled File Name  . . . . . . .   QSYSPRT       Name
 Job Name . . . . . . . . . . . .   QUSRS3        Name, *
   User Name  . . . . . . . . . .     QUSR        Name
   Job Number . . . . . . . . . .     655262      000000-999999
 Spooled File Number  . . . . . .   *LAST         1-9999, *ONLY, *LAST
 Data Stream Type . . . . . . . .   *IBM4019      1-7, *IBM4019, *IBM4029...
 Top Border Size  . . . . . . . .   0             0-9999
 Left Border Size . . . . . . . .   0             0-9999
 Start Page Number  . . . . . . .   1             1-9999
 End Page Number  . . . . . . . .   *LAST         1-9999, *LAST
 Set Character Position . . . . .   *YES          *YES, *NO
 Down Load Fonts  . . . . . . . .   *YES          *YES, *NO

                                                                    Bottom
F3=Exit   F4=Prompt   F5=Refresh   F12=Cancel   F13=How to use this display
F24=More keys
```

Figure 116. Example of the ZTRNAFP Command

Parameter	Definition
File	The name of the AFP spooled file to be transformed into an ASCII spooled file.
Job	The fully qualified job name that identifies the AFP spooled file to transform. This parameter is made up of the following three parts: **Job Name** The name of the job. **User Name** The name of the user that owns the spooled file to be transformed. **Job Number** The number of the job.
Spooled file number	You can specify one of three possible values: **number** The actual number of the spooled file. ***ONLY** Only one spooled file has the specified file name. ***LAST** Use the highest numbered spooled file with the specified file name. This is the default value.
Data stream type	Specifies the type of ASCII data stream to be generated. The following table shows the accepted special values and their descriptions. ***Special value Description*** ***IBM4019** IBM 4019 PPDS data stream. ***IBM4029** IBM 4029 PPDS data stream. ***HP** HP PCL4 data stream.

***HP3**	HP PCL5 data stream.
***IBM4216H**	HP PCL4 for IBM4216 printer.
***PS**	PostScript data stream.
***TEXT**	ASCII text, carriage return and line feed controls. This is the default value.

Top border size

The size of the top border on the page in 1/300ths of an inch. This can be used to force output outside of the unprintable border of an ASCII printer. This may cause output to be pushed off the bottom of the page. The default value is 0.

Left border size

The size of the left border on the page in 1/300ths of an inch. This can be used to force output outside of the unprintable border of an ASCII printer. This may cause output to be pushed off the right side of the page. The default value is 0.

Start page number

The page number of the first page in the AFP spooled file to transform. Previous pages are skipped. The default value is 1.

End page number

The page number of the last page in the AFP spooled file to transform. Following pages are skipped. The special value **LAST* indicates to the transform API that it should transform all pages from the specified starting page number to the end of the spooled file. The default value is **LAST*.

Set character position

**YES* will cause the transform to set the position of each character on the page. This will improve the appearance of the output in some instances. This is the default value.

**NO* will cause the transform to only set the position of a character after an absolute move command in the AFP data stream. This will reduce the size of the output created.

Downloaded fonts

If **YES* is used, the transform may place soft fonts in the ASCII data stream in order to generate the output on an ASCII printer. This option is recommended if the AFP data stream uses typographic fonts. The default value is **YES*.

If **NO* is used the transform will not use soft fonts in the ASCII data stream. This may reduce the size of the output generated by the transform.

The ASCII spooled file that is created will use the QTAAPRTF printer file. The user can change or override this file to direct the output to any ASCII printer attached to the system.

Any error condition reported to the program stops the transform operation.

For more information on the Transform AFP Spooled File to ASCII Spooled File tool, read the member TWPINFO in the file QATTINFO in the library QUSRTOOL.

B.3 Additional Documentation

You can find additional information in the following publications:

- *AS/400 System API Reference*, SC41-3801

Appendix C. Using the AFP Viewer with AS/400 AFPDS Spooled Files

Many users would like to be able to view the AFPDS spooled files produced on the AS/400 using the AFP Workbench - Viewer product on their PC. However, it is not a straightforward process to get the AFPDS out of a spooled file and into a shared folder so that the Viewer can get to it. We present here a sample method of doing this using a command, a CL program, and a C program.

The command CPYAFP is used to invoke this function. The user provides the spooled file name, qualified job name, spooled file number, document name (PC file), and folder name. The command invokes the CL program CPYAFP which creates a temporary file, calls the C program CPYAFPTOF to put the AFPDS into this temporary file, and then copies the AFPDS from the temporary file to the PC file. In order to put the AFPDS into the temporary file, CPYAFPTOF gets the AFPDS out of the spooled file, puts it into a temporary space, and uses record I/O to copy the data to the file.

This program does not provide a means of getting resources used by the program into a shared folder to be used by the Viewer. You can use the AFPU/400 product to get overlays and page segments into files and then use the CPYTOPCD command to copy the contents of the file to a PC file for use by the viewer. This process is documented in Chapter 5 of *AS/400 Printing III*, GG24-4028.

C.1 CPYAFP Command

```
/*******************************************************************/
/*                                                                 */
/*  COMMAND NAME: CPYAFP                                           */
/*                                                                 */
/*  COMMAND TITLE: COPY AFPDS SPOOLED FILE TO FOLDER               */
/*                                                                 */
/*  DESCRIPTION: This will call a command processing program to    */
/*               take an AFP spooled file and copy it to a PCFILE  */
/*               in a folder.                                      */
/*                                                                 */
/*******************************************************************/
CPYAFP:     CMD        PROMPT('Copy AFPDS File') /* This command +
                         is used to take data from an AFP +
                         spooled file and copy it to a pcfile +
                         in a folder. */
        PARM   KWD(FILE) +
                   TYPE(*NAME) LEN(10) RSTD(*NO) MIN(1) MAX(1) +
                   FILE(*OUT) FULL(*NO) EXPR(*YES) VARY(*NO) +
                   PASSATR(*NO) PROMPT('Spooled File Name')
        PARM   KWD(JOB) TYPE(Q1) DFT(*) SNGVAL(*) MIN(0) MAX(1) +
                   FILE(*NO) PROMPT('Job Name')
        PARM   KWD(SPLNBR) +
                   TYPE(*CHAR) LEN(5) RSTD(*NO) DFT(*LAST) +
                   RANGE(1 9999) SPCVAL((*ONLY 0) (*LAST -1)) +
                   MIN(0) MAX(1) EXPR(*YES) VARY(*NO) +
                   PASSATR(*NO) PROMPT('Spooled File Number')
        PARM   KWD(DOC) +
                   TYPE(*CHAR) LEN(12) RSTD(*NO) MIN(1) MAX(1) +
                   FILE(*NO) FULL(*NO) EXPR(*YES) VARY(*NO) +
```

```
                    PASSATR(*NO) PROMPT('Document')
          PARM   KWD(FLR) +
                    TYPE(*CHAR) LEN(63) RSTD(*NO) MIN(1) MAX(1) +
                    FILE(*NO) FULL(*NO) EXPR(*YES) VARY(*NO) +
                    PASSATR(*NO) PROMPT('Folder')
Q1:       QUAL  TYPE(*NAME) +
                LEN(10) +
                RSTD(*NO) +
                MIN(1) +
                VARY(*NO) +
                EXPR(*YES) +
                PASSATR(*NO)
          QUAL  TYPE(*NAME) +
                LEN(10) +
                RSTD(*NO) +
                MIN(1) +
                VARY(*NO) +
                EXPR(*YES) +
                PROMPT('User Name')
          QUAL  TYPE(*CHAR) +
                LEN(6) +
                RSTD(*NO) +
                MIN(1) +
                VARY(*NO) +
                EXPR(*YES) +
                FULL(*YES) +
                RANGE(000000 999999) +
                PROMPT('Job Number')
```

The following screen is an example of using the CPYAFP command with prompting.

```
                         Copy AFPDS File (CPYAFP)

 Type choices, press Enter.

 Spooled File Name  . . . . . . .   QSYSPRT       Name
 Job Name . . . . . . . . . . . .   QUSR3         Name, *
   User Name  . . . . . . . . . .     BADAN       Name
   Job Number . . . . . . . . . .     001002      000000-999999
 Spooled File Number  . . . . . .   *LAST         1-9999, *ONLY, *LAST
 Document . . . . . . . . . . . .   AFP1          Character value
 Folder . . . . . . . . . . . . .   BADAN

                                                                    Bottom
 F3=Exit   F4=Prompt   F5=Refresh   F12=Cancel   F13=How to use this display
 F24=More keys
```

Figure 117. Example of the CPYAFP Command

The parameters for the CPYAFP command are as follows:

Parameter	Definition
File	The name of the AFPDS spooled file to be copied to the folder.

Job

The fully qualified job name that identifies the AFPDS spooled file to copy. This parameter is made up of the following three parts:

Job Name The name of the job.

User Name The name of the user that owns the spooled file to be copied.

Job Number The number of the job.

Spooled file number

You can specify one of three possible values:

number The actual number of the spooled file.

***ONLY** Only one spooled file has the specified file name.

***LAST** Use the highest numbered spooled file with the specified file name. This is the default value.

Document

The document name for the PC file which is to receive the AFPDS.

Folder

The folder which is to contain the document created.

C.2 CPYAFP CL Program

```
/*****************************************************************/
/*                     Copy AFPDS spool file to PC file in folder */
/*                                                               */
/* FUNCTION:           This program copies an AFPDS spool file   */
/*                     to a PC File in a folder. It uses a C     */
/*                     program CPYAFPTOF to copy the AFPDS from  */
/*                     a spool file to a physical file.          */
/*                                                               */
/* INPUT:              Spool file name, Qualified job name of    */
/*                     spool file, Spool file number, Document   */
/*                     name, and Folder name.                    */
/*                                                               */
/* INVOCATION:         Use CPYAFP command                        */
/*****************************************************************/
 CPYAFP:     PGM        PARM(&SNAME &JNAME &SNBR &DNAME &FNAME)
             DCL        VAR(&SNAME) TYPE(*CHAR) LEN(10)
             DCL        VAR(&JNAME) TYPE(*CHAR) LEN(26)
             DCL        VAR(&SNBR) TYPE(*CHAR) LEN(5)
             DCL        VAR(&DNAME) TYPE(*CHAR) LEN(12)
             DCL        VAR(&FNAME) TYPE(*CHAR) LEN(63)
             MONMSG     MSGID(CPF0000)

/*****************************************************************/
/* Create temp physical file to use as input to CPYTOPCD         */
/*****************************************************************/
             CRTPF      FILE(QTEMP/OUT) RCDLEN(400) LVLCHK(*NO)
/*********************************************************************/
/* Call CPYAFPTOF program to put data from spool file into physical file */
/*********************************************************************/
             CALL CPYAFPTOF (&SNAME &JNAME &SNBR)
/*****************************************************************/
```

```
/* Copy physical file to PC File in folder using CPYTOPCD         */
/*****************************************************************/
            CPYTOPCD   FROMFILE(QTEMP/OUT) TOFLR(&FNAME) +
                         TODOC(&DNAME) TRNTBL(*NONE) TRNFMT(*NOTEXT)
/*****************************************************************/
/* Delete physical file                                            */
/*****************************************************************/
            DLTF       FILE(QTEMP/OUT)
            ENDPGM
```

C.3 CPYAFPTOF C Program

```
/*********************************************************************/
/*                     Copy AFPDS spool file to physical file      */
/*                                                                   */
/* Name:     cpyafptof                                               */
/*                                                                   */
/* Function: Get an existing AFP spool file and load it into a       */
/*           userspace.  Write the user space to an output file.     */
/*                                                                   */
/*           Any error reported to this program ends the process.    */
/*                                                                   */
/* Parameters:                                                       */
/*   1. Spooled File Name       : TYPE(*CHAR) LEN(10)                */
/*                                                                   */
/*                                This parameter specifies the name  */
/*                                of the spooled file to be          */
/*                                converted.                         */
/*                                                                   */
/*   2. Qualified Job Name      : TYPE(*CHAR) LEN(26)                */
/*                                                                   */
/*                                This parameter is used to identify */
/*                                the spooled file to transform.     */
/*                                It contains the following three    */
/*                                parts:                             */
/*                                                                   */
/*         Job Name             : TYPE(*CHAR) LEN(10)                */
/*                                Specifies the name of the job.     */
/*                                Special values are not accepted.   */
/*                                                                   */
/*         User Name            : TYPE(*CHAR) LEN(10)                */
/*                                Specifies the name of the user     */
/*                                that owns the spooled file to be   */
/*                                Transformed.                       */
/*                                Special values are not accepted.   */
/*                                                                   */
/*         Job Number           : TYPE(*CHAR) LEN(6)                 */
/*                                This parameter specifies the job   */
/*                                number of the qualified job name.  */
/*                                This is used to identify the       */
/*                                spooled file to be converted.      */
/*                                Special values are not accepted.   */
/*                                                                   */
/*   3. Spooled File Number     : TYPE(*CHAR) LEN(5)                 */
/*                                                                   */
/*                                This parameter specifies the       */
/*                                spooled file number. 1-9999        */
/*                                Two special values are accepted.   */
```

```
/*                                 0        - Only one has the      */
/*                                            specified file name   */
/*                                 -1       - Uses the highest      */
/*                                            numbered spooled file */
/*                                            with the specified    */
/*                                            file name. (default)  */
/*                                                                  */
/*                                                                  */
/*                                                                  */
/* Function Call Environment:                                       */
/*    Call this program directly.                                   */
/*                                                                  */
/* Running Environment :                                            */
/*    Other APIs needed:                                            */
/*            1. QUSRJOBI (Retrieve Job Information)                */
/*            2. QUSRSPLA (Get Spooled File Attributes)             */
/*            3. QUSCRTUS (Create User Space)                       */
/*            4. QUSPTRUS (Retrieve User Space Using Pointer)       */
/*            5. QSPOPNSP (Open A Spool File )                      */
/*            6. QSPGETSP (Write Spool File's Data Into User Space) */
/*            7. QSPCLOSP (Close Spool File)                        */
/*            8. QUSDLTUS (Delete User Space)                       */
/*                                                                  */
/********************************************************************/


/* ***************************************************************** */
/* Include files.                                                    */
/* ***************************************************************** */
  #include <stdio.h>                    /* Standard I/O routines    */
  #include <string.h>                   /* String handling routines */
  #include <stdlib.h>                   /* Standard library         */
  #include <signal.h>                   /* Standard signal library  */
  #include <recio.h>                    /* Standard library         */
  #include "qusrtool/qattsysc(opusapi)"  /* US API C header         */
  #include "qusrtool/qattsysc(opspapi)"  /* SP API C header         */
  #include "qusrtool/qattsysc(opwpapi)"  /* WP API C header         */
  #include <xxcvt.h>


  #define ON  1
  #define OFF 0
  #define TRUE  1
  #define FALSE 0
  #define _RCDLEN 400

/********************************************************************/
/* Declare data structures which will be used in the program.       */
/********************************************************************/

typedef struct {
   char NM[10];
   char LIB[10];
} QNAME;     /* Define the qualified name                           */

typedef struct {
   char JOBNAME[10];
   char USRNAME[10];
```

```
   char JOBNUM[6];
} QJOBNAM;     /* Define the qualified job name structure           */

typedef struct {
   int  BYTESPRO;
   int  BYTESAVL;
   char EXCPID[7];
   char RESRVD;
   char EXCPDATA[100];
} ERRSTRUCTURE;     /* Define the error return structure           */

typedef struct {
   int           JOBIPL ;
   int           JOBOFF ;
   char          JOBTOD[8];
} JOBID;       /* Define the internal identifier structure          */

typedef struct {
   int SPLFIPL ;
   int SPLFOFF ;
   char SPLFTOD[8];
} SPLFID;     /* Define internal spooled file identifier structure   */

/*********************************************************************/
/* Declare all the global variables used in the program.             */
/*********************************************************************/
QJOBNAM       qjobnam;                 /* Qualified job name         */
char          format[8];               /* Format name                */
jobi0100      jobinfo;                 /* Receiver variable for      */
                                       /* QUSRJOBI                   */
                                       /* Variables for QSPOPNSP     */
JOBID         ijobid;                  /* Internal Job Identifier    */
SPLFID        isplfid;                 /* Internal spool file        */
                                       /*  identifier                */
int           erroccrd;                /* Exception message occurred?*/
char          msgid[7];                /* CPF message ID             */
char          excpid[7];               /* Error Code ID              */
char          excpmsg[100];            /* Error Message              */
ERRSTRUCTURE  errcode;                 /* Error Code Structure       */
int           info_len;
char          user[10];
char          splfname[10];
char          job_name[10];
char          jobnumbr[10];
char          splfnumr[10];


char *        in_buf;
int datalen;
char record[_RCDLEN];
_RFILE  *out;


spla0200      splinfo;
int           len;
int           fnum;
int           h;
char          splfnam[10];
spfr_header * space;
```

```
spfr_header * inspace;
int           readrecs;                /* Number of records to read  */
int           splfnum;                 /* Spool file number          */
int           buffer;                  /* Ordinal number of the      */
                                       /*  buffer to get             */
char          eofind[10];              /* Action on end of file      */
char          devcls[10];              /* Device class               */

/*********************************************************************/
/* Variables for QUSCRTUS API.                                       */
/*********************************************************************/
QNAME         inname;                  /*  Qualified user space name */
QNAME         outname;                 /*  Qualified user space name */
char          extattrib[10];           /*  External attributes       */
long int      initialsize;
int           in_size;
int           out_size;
char          initialvalue;
char          authority[10];
char          description[50];
char          replace[10];

/*********************************************************************/
/* Beginning of Function Declarations.                               */
/*********************************************************************/
/*********************************************************************/
/* min - Get the smaller number of two numbers.                      */
/*********************************************************************/
int  min( const int a1, const int a2)
{
    if (a1 < a2)
         return a1 ;
    else
         return a2 ;
}

/*********************************************************************/
/* clear - Fill the string variable (cptr) with (len) blanks.        */
/*********************************************************************/
void clear(char *cptr, const int len)
{
   int i;
   char *charptr;

   charptr = cptr;
   for (i = 0; i < len; i++, charptr++) *charptr = ' ';
}


/*********************************************************************/
/* del_usr_sp - Delete a user space                                  */
/*********************************************************************/
void del_usr_sp(char * us_name)
{
   erroccrd = 0;

   QUSDLTUS(us_name, (char *)&errcode);

   if (erroccrd) {
```

```
      printf("Error occurred during QUSDLTUS API. \n");
      printf("User space %10s could not be deleted \n",
              us_name);
   }
}


/*******************************************************************/
/* signal_handler - Error handling for all CPF messages.           */
/*******************************************************************/
void signal_handler(int sig)
{
  _INTRPT_Hndlr_Parms_T sdata;             /* Pointer to signal data*/

  _GetExcData(&sdata);                     /* Retrieve signal data  */

  memcpy(msgid, sdata.Msg_Id, sizeof(msgid));  /* Copy message ID    */
  printf("Message Received : %s\n", msgid);    /* Print message      */
  signal(SIGALL, &signal_handler);         /* Always remember to re- */
  erroccrd = TRUE;                         /* declare signal handler */
}

/******************************************************************* */
/* Beginning of Main routine.                                      */
/******************************************************************* */
main(argc, argv)
int argc;
char *argv[];
{
/*-----------------------------------------------------------------*/
/* Declare the function signal_handler as the routine to be called  */
/* when an exception message is received.                          */
/*-----------------------------------------------------------------*/
   signal(SIGALL, &signal_handler);

/*-----------------------------------------------------------------*/
/* Copy the input parameters to local variables.                   */
/*-----------------------------------------------------------------*/
   clear(splfname, sizeof(splfname) );
   info_len = min(strlen(argv[1]), 10);
   memcpy(splfname, argv[1], info_len );

   clear(job_name, sizeof(job_name) );
   info_len = min(strlen(argv[2]), 10);
   memcpy(job_name, argv[2], info_len );

   clear(user, sizeof(user));
   info_len = min(strlen(argv[2] + 10), 10);
   memcpy(user, argv[2] + 10, info_len );

   clear(jobnumbr, sizeof(jobnumbr));
   info_len = min(strlen(argv[2] + 20), 6);
   memcpy(jobnumbr, argv[2] + 20, info_len );

   clear(splfnumr, sizeof(splfnumr));
   info_len = min(strlen(argv[3]), 10);
   memcpy(splfnumr, argv[3], info_len );
```

```
/*-------------------------------------------------------------------*/
/* Call QUSRJOBI API to retrieve current user name.                  */
/*-------------------------------------------------------------------*/
   memcpy(format, "JOBI0100",8);

   clear((char *)&qjobnam, 26);
   memcpy((char *)&qjobnam, "*", 1);

   clear((char *)&ijobid,sizeof(ijobid));

   erroccrd = FALSE;

   QUSRJOBI((char *)&jobinfo, sizeof(jobinfo), format, (char *)&qjobnam,
    (char *)&ijobid);

   if (erroccrd) {
        printf("Job information cannot be retrieved successfully! \n");
        printf("Ending the program \n");
        exit(1);
   }

/*-------------------------------------------------------------------*/
/* Call QUSRSPLA API to get information about the spooled file.      */
/*-------------------------------------------------------------------*/
  memcpy(format, "SPLA0200", sizeof(format));
  clear(qjobnam.JOBNAME, 10);
  memcpy(qjobnam.JOBNAME, job_name, sizeof(qjobnam.JOBNAME));
  clear(qjobnam.USRNAME, sizeof(qjobnam.USRNAME));
  memcpy(qjobnam.USRNAME, user, sizeof(qjobnam.USRNAME));
  clear(qjobnam.JOBNUM, sizeof(qjobnam.JOBNUM));
  memcpy(qjobnam.JOBNUM, jobnumbr, sizeof(qjobnam.JOBNUM));
  clear((char *)(&ijobid), sizeof(ijobid));
  clear((char *)(&isplfid), sizeof(isplfid));
  fnum = atoi(splfnumr);
  len  = sizeof(splinfo);
  clear((char *)(&splinfo), sizeof(splinfo));
  memcpy(splfnam, splfname, sizeof(splfnam));

  QUSRSPLA((char *)(&splinfo), len, format, (char *)(&qjobnam),
   (char *)(&ijobid), (char *)(&isplfid), splfnam, fnum);

  if (erroccrd) {
       printf("The spooled file cannot be retrieved! \n");
       printf("Ending this program.\n");
       exit(1);
  }

/*-------------------------------------------------------------------*/
/* Process only printer files.                                       */
/*-------------------------------------------------------------------*/

  clear(devcls,sizeof(devcls));
  strncpy (devcls, splinfo.dev_type, 10);
  if (strncmp(devcls, "PRINTER   ", 10) == 0) {

/*-------------------------------------------------------------------*/
/* Beginning of printer file processing.                             */
/*-------------------------------------------------------------------*/
```

```
/*-------------------------------------------------------------------*/
/* Call QUSCRTUS API to create a user space for retrieving the       */
/* spooled file datastream.                                          */
/*-------------------------------------------------------------------*/

/* set up user space name to be created */
     clear(inname.NM, sizeof(inname.NM) );
     memcpy(inname.NM, "IN        ", 10);
     memcpy(inname.LIB, "QTEMP     ", sizeof(inname.LIB));

/*-------------------------------------------------------------------*/
/* Set initial size of user space                                    */
/* The size is calculated using the spooled file buffer size,        */
/* the number of buffers in the spooled file and the number of       */
/* pages. Additional constants are added for header information.     */
/*-------------------------------------------------------------------*/
     initialsize = (splinfo.file_buffer_size+84)
                    * splinfo.number_buffers +
                   (splinfo.total_pages*12) + 128 + sizeof(splinfo);

/* Initialize the user space by NULL character */
     initialvalue = '\0';

/* Public authority */
     memcpy(authority, "*ALL      ", sizeof(authority));

/* Set the external attributes of the user space */
     memcpy(extattrib, "SPOOL_FILE", sizeof(extattrib));

/* Set the comments to the user space */
     clear(description, sizeof(description));
     strncpy(description, splinfo.splf_name,10) ;

     erroccrd = FALSE;

/* Do not replace the user space if it exists  */
     memcpy(replace, "*NO       ", sizeof(replace));

     QUSCRTUS((char *)(&inname), extattrib, initialsize,
              &initialvalue, authority, description, replace,
             (char *)(&errcode));

     if (erroccrd) {
        printf("User Space %.10s in library %.10s cannot be created\n",
                inname.NM, inname.LIB);
        printf("Ending this program.\n");
        exit(0);
     }

/*-------------------------------------------------------------------*/
/* Call QSPOPNSP API to open the spooled file                        */
/*-------------------------------------------------------------------*/

     clear(qjobnam.JOBNAME, 10);
     memcpy(qjobnam.JOBNAME, job_name, sizeof(qjobnam.JOBNAME));
     clear(qjobnam.USRNAME, sizeof(qjobnam.USRNAME));
     memcpy(qjobnam.USRNAME, user, sizeof(qjobnam.USRNAME));
     clear(qjobnam.JOBNUM, sizeof(qjobnam.JOBNUM));
     memcpy(qjobnam.JOBNUM, jobnumbr, sizeof(qjobnam.JOBNUM));
```

```
     readrecs = -1;
     splfnum = atoi(splfnumr);
     memcpy(splfnam, splfname, sizeof(splfnam));

     QSPOPNSP(&h,(char *)(&qjobnam), (char *)(&ijobid),
             (char *)(&isplfid), splfnam, splfnum, readrecs,
             (char *)(&errcode));

     if (erroccrd) {
        printf("Error occurs during open the spool file! \n");
        printf("Ending the program \n");
        del_usr_sp((char *)&inname);
        del_usr_sp((char *)&outname);
        exit(0);
     }

/*-------------------------------------------------------------------*/
/* Call QSPGETSP API to get data from spool file and put into a      */
/* user space.                                                       */
/*-------------------------------------------------------------------*/
     memcpy(format,"SPFR0300",sizeof(format));
     buffer = -1;
     memcpy(eofind,"*WAIT     ", sizeof(eofind));

     QSPGETSP(h, (char *)(&inname), format,
              buffer, eofind, (char *)(&errcode));

     if (erroccrd) {
        printf("Error occurs during calling QSPGETSP API! \n");
        printf("Ending the program \n");
        del_usr_sp((char *)&inname);
        del_usr_sp((char *)&outname);
        exit(0);
     }


/*-------------------------------------------------------------------*/
/* CALL QUSPTRUS API to get a pointer to the input user space.       */
/*-------------------------------------------------------------------*/
     QUSPTRUS((char *)(&inname), &inspace);

     if (erroccrd) {
        printf("Error occurred during QUSPTRUS API \n");
        printf("Ending the program \n");
        del_usr_sp((char *)&inname);
        del_usr_sp((char *)&outname);
        exit(0);
     }

/*-------------------------------------------------------------------*/
/* CALL QSPCLOSP API to close the spooled file being transformed.    */
/*-------------------------------------------------------------------*/

     QSPCLOSP(h, (char *)(&errcode) );

     if (erroccrd) {
        printf("Error occurred during closing the source spooled file.\n ");
        del_usr_sp((char *)&inname);
        del_usr_sp((char *)&outname);
```

```
        exit(0);
     }

/*-----------------------------------------------------------------*/
/* Get the size of the input data.                                 */
/*-----------------------------------------------------------------*/

     in_size= inspace->usrspc_used -(inspace->first_buffer_offset -1);

/*-----------------------------------------------------------------*/
/* Set pointer to the start of the input data.                     */
/*-----------------------------------------------------------------*/

     in_buf = ((char *)inspace) + inspace->first_buffer_offset;

/*-----------------------------------------------------------------*/
/* Open the output file                                            */
/*-----------------------------------------------------------------*/

     if ((out = _Ropen( "QTEMP/OUT", "wr")) == NULL )
     {
         printf("Open failed for output file\n");
         exit(0);
     };
/*-----------------------------------------------------------------*/
/* Write the data to the output file                               */
/*-----------------------------------------------------------------*/

     datalen = in_size;
     while (datalen > _RCDLEN)
     {
        memmove(record, in_buf, _RCDLEN);
        _Rwrite(out, record, _RCDLEN);
        in_buf += _RCDLEN;
        datalen -= _RCDLEN;
     }
     if (datalen > 0)
     {
        memset(record, 0, _RCDLEN);
        memmove(record, in_buf, datalen);
        _Rwrite(out, record, _RCDLEN);
     }
/*-----------------------------------------------------------------*/
/* Close the output file                                           */
/*-----------------------------------------------------------------*/

     _Rclose(out);
/*-------------------------------------------------------------------*/
/* Delete the user space which was created by this program.          */
/*-------------------------------------------------------------------*/

     del_usr_sp((char *)&inname);

/*-------------------------------------------------------------------*/
/* End of printer file processing.                                   */
/*-------------------------------------------------------------------*/
  }
}   /* end of main */
```

C.4 Commands to Create CPYAFP Command and Programs

To create the CPYAFP CL program, enter the following command:

```
CRTCLPGM PGM(yourlib/CPYAFP) SRCFILE(yourlib/yoursrcf) SRCMBR(yourmbr)
         TEXT('Copy AFPDS to PC file')
```

To create the CPYAFP command, enter the following command:

```
CRTCMD CMD(yourlib/CPYAFP) PGM(yourlib/CPYAFP) SRCFILE(yourlib/yoursrcf)
       SRCMBR(yourmbr) TEXT('Copy AFPDS to PC file')
```

To create the CPYAFPTOF C program, enter the following command:

```
CRTBNDC PGM(yourlib/CPYAFPTOF) SRCFILE(yourlib/yoursrcf) SRCMBR(yourmbr)
         TEXT('Get AFPDS spool data to file')
```

Appendix D. PrintManager/400 and the PM400 Tool

PrintManager/400 is the name given to a part of the base operating system (OS/400) which provides access to several print functions, including AFP, on the AS/400. For more information about PrintManager refer to *SAA Common Programming Interface PrintManager Reference*, S544-3698.

Unlike “native” AS/400 printing, PrintManager/400 does not use printer files. Instead, it uses objects called Print Descriptors to control where a job will be printed, how it will be processed, and how the output will appear. One advantage of printing using PrintManager/400 is that it gives the programmer direct control over the data stream that is being sent to print. For the AS/400, this includes many different data streams including AFPDS, AFPDSLINE (mixed), ASCII, LINE, and SCS.

Another advantage of PrintManager is that the user can control the use of AFP resources such as form definitions, and page definitions, which are not usually accessible to native AS/400 applications. These resources allow additional flexibility in the format of your printed output.

You would want to consider a PrintManager/400 application if you need to:

- Have more control than is provided by DDS for your printed output.
- Migrate applications from S/390.
- Include resources inline.
- Use features of form definitions or page definitions.
- Add AFP functions when you don’t have the source for your existing application programs.

To help you get started, a tool is available from your IBM or Pennant Systems** representative which provides an AS/400 command front end to a C-language program which in turn calls the PrintManager/400 functions. This tool is named PM400 and is provided as-is with no support provided by IBM. It is available to IBM employees from the PRINTERS disk using the following command on a suitable VM system:.

```
TOOLS SENDTO BLDVMA MASTOOLS PRINTERS GET PM400 PACKAGE
```

The tool consists of a save file which contains the library PM400. You must restore the saved library to your system and add the library PM400 to your library list in order to access the tool.

Using PM400, you can take a physical file in any of the supported data streams and apply a number of print related parameters to give you the desired spooled output. You can either use the program as is with the command interface, or use the source code provided as a guideline for developing your own application.

The interface provided by the PM400 command PRTAFPF is very flexible, and can be used for a variety of PrintManager/400 functions. One of the most common ways to make use of it is to take a spooled file, originally destined for “line” printing on an SCS printer, and reformat it with a form definition and page definition. The following steps are involved:

1. Create a physical file with record length one greater than the length of a printed line in your spooled file.

```
CRTPF FILE(MYLIB/MYFILE) RCDLEN(133) MAXMBRS(*NOMAX) LVLCHK(*NO)
```

2. Copy the spooled file to the physical file and indicate that you want first character forms control characters created. This essentially creates line data.

```
CPYSPLF FILE(MYSPLFL) TOFILE(MYLIB/MYFILE)
        JOB(000111/DSP01/USER1)
        SPLNBR(1) TOMBR(MYMBR) CTLCHAR(*FCFC)
```

3. Now, use the PRTAFPF command to combine the line data including carriage control information with a form definition and page definition.

```
PRTAFPF FILE('MYLIB/MYFILE(MYMBR)')
        DATTYP(LINE)
        CC(YES)
        FORMDEF('*SYSTEM QSYS/F10GL')
        OUTQ(MYOUTQ)
        PAGDEF('*SYSTEM QSYS/P1A06462')
```

Another common use of PM400 is to print an AFPDS data stream that was generated as a file either on an AS/400 or somewhere else. This function is similar to using the PRTAFPDTA command. For example, if you had an AFPDS data stream in the file MYAFPDS, you could issue the following command to spool the AFPDS.

```
PRTAFPF FILE('MYLIB/MYAFPDS(MYMBR)')
        DATTYP(AFPDS)
```

List of Abbreviations

AFP	Advanced Function Printing
AFPDS	Advanced Function Printing Data Stream
AFIG	advanced function image and graphics
AFPU	AFP Utilities/400
APA	all points addressable
API	application programming interface
APW	Advanced Print Writer
ASCII	American Standard Code for Information Interchange
ASF	automatic sheet feed
BCOCA	Bar Code Object Content Architecture
BGU	Business Graphics Utility
BSC	binary synchronous communication
CFM	continuous forms module
CL	Command Language
COR	computer output reduction
CPI	characters per inch
CPS	characters per second
CPU	central processing unit
CSSID	coded character set identifier
DBCS	double byte character set
DDS	data description specification
DID	document insertion device
DPE	Decompression Performance Enhancement
DPF	Distributed Print Function
DPI	dots per inch
EBCDIC	Extended Binary Coded Decimal Interchange Code
EPROM	erasable programmable read only memory
FGID	font global identifier
FMA	Font Management Aid
FOCA	Font Object Content Architecture
FORMDEF	form definition
GDDM	Graphical Data Display Manager
GDI	Graphics Display Interface
GOCA	Graphics Object Content Architecture
HP	Hewlett-Packard
IBM	International Business Machines Corporation
IMDS	image data stream
INA	internal network adapter
INO	integrated network option
IOCA	Image Object Content Architecture
IPDS	Intelligent Printer Data Stream
IPM	impressions per minute
ITSO	International Technical Support Organization
JCL	job control language
JES	Job Entry Subsystem
LAN	local area network
LCD	liquid crystal display
LED	light emitting diode
LP	logical page
LPD	Line Printer Daemon
LPI	lines per inch
LPR	Line Printer Requester
LU	logical unit
NJE	Network Job Entry
NLQ	near letter quality
NLS	National Language Support
NLV	National Language Version
NMR	Nodal Message Record
MES	miscellaneous equipment specification
MICR	magnetic ink character recognition
MODCA-P	Mixed Object Document Content Architecture - Presentation
MVS	Multiple Virtual Systems
OCR	optical character recognition
OEM	original equipment supplier
OVL	overlay
PCL	printer control language (Hewlett-Packard)

PDT printer definition table

PFD Print Format Definition

PFT printer function table

PFU Print Format Utility

PP physical page

PPDS Personal Printer Data Stream

PRPQ program request for price quotation

PSF Print Services Facility

PTF program temporary fix

PTOCA Presentation Text Object Content Architecture

RISC reduced instruction set computer

RJE remote job entry

RPQ request for price quotation

RSCS Remote Spooling Communications Subsystem

SAA Systems Application Architecture

SBCS Single byte character set

SCS SNA character string

SDA Screen Design Aid

SDLC synchronous data link control

SEU Source Entry Utility

SI shift-in

SNA Systems Network Architecture

SNADS SNA distribution services

SO shift-out

SQL Structured Query Language

SSAP source service access point

TCP/IP Transmission Control Protocol/Internet Protocol

VM Virtual Machine

VSE Virtual Storage Extended

XPA Expandable Printed Area

Index

Special Characters

/prt0, /prt1, etc. 26

A

abbreviations 287
acronyms 287
activation timer 9, 10, 15, 16, 20, 21
Advanced DBCS Printer Support/400 237
Advanced Function Image and Graphics feature 192
Advanced Function Printing
  Advanced Function Image and Graphics feature 192
  AFP to ASCII transform 265
  background to PSF/400 175
  DBCS printing 228
  DDS keywords 179
  Decompression Performance Enhancement feature 193
  disabling printer resident fonts 105, 109
  displaying AFPDS spooled files 104
  distributed printing via PSF/2 180
  downloading DBCS fonts 228
  features of IPDS impact printers 198
  features of IPDS laser printers 192
  font enhancements on IBM 3912, 3916, 4028 130
  IPDS impact printers 195
  IPDS laser printers 183
  logical page origin on IBM 3835-002 114
  logical page origin on IBM 3912, 3916, 4028 112
  managing fonts on PSF/2 69
  managing fonts on PSF/6000 76
  managing fonts on VM and MVS 62
  overview of PSF/400 176
  page rotation 90 degrees 113
  positioning data on IBM 3912, 3916 118, 122
  printers which require PSF/400 178
  sending AFP resources from AS/400 to MVS and VM 62
  sending AFP resources to PSF/2 69
  sending AFP resources to PSF/6000 75
  top margin with *COR 117
  when you should use PSF/400 178
AFP
  see Advanced Function Printing
AFP resources
  fonts 203
  form definitions 200
  overlays 201
  overview 199
  page definitions 202
  page segments 202
AFP to ASCII transform 265
AFP Utilities
  multiple input drawer support 263
  multiple output tray support 261
  new printer support 261
AFP viewer 271
  viewing spooled files using AFP viewer 271
  viewing using AFP viewer 271
AS/400 to AS/400 36, 48
ASCII printing
  activation timer 9, 10, 15, 16, 20, 21
  data security 4
  DBCS printing 220
  error recovery 22
  form feed 9, 15, 20
  Hewlett-Packard JetDirect 24
  inactivity timer 9, 10, 16, 17, 21, 22
  locking the printer 3
  print queue name 26
  printers with INO cards 17
  restrictions 23
  sharing 4033 attached printers 10
  sharing MarkNet XLe attached printers 16

B

BACKOVL parameter 201
barcode CODE128 support on IBM 3935 262
Bhajiwala
  see Dave, Amit

C

changing line descriptions 5, 11, 17
changing NJE headers 80
changing spooled file attributes 201
changing workstation customization objects 145
Character Generator Utility for DBCS 238
CHGPRTF 99
Commands
  ADDEXITPGM 33, 82
  CHGLINETH 5, 11, 17
  CHGLINTRN 5, 11, 17
  CHGPF 235
  CHGPRTF 99, 201
  CHGSPLFA 201
  CHGSRCPF 235
  CHGUSRPRTI 33, 77
  CPYAFP 271
  CPYSPLF 238
  CRTDEVPRT 7, 13, 19
  CRTDTAARA 111
  CRTFNTRSC 200
  CRTFORMDF 199
  CRTOUTQ 33, 91, 94
  CRTOUTQ for remote printing to OS/400 V2 50

Commands *(continued)*
CRTOUTQ for remote printing to OS/400 V3 39
CRTOUTQ for remote printing to PSF/2 65
CRTOUTQ for remote printing to PSF/6000 71
CRTOUTQ for remote printing to VM and MVS 58
CRTOVL 199
CRTPAGDFN 200
CRTPAGSEG 199
CRTPF 235
CRTPRTF 99, 201
CRTSRCPF 235
DSPDSTLOG 46, 56
DSPUSRPRTI 33, 78
LPR 31, 162
OVRPRTF 99, 201
OVRSPLF 238
RTVUSRPRTI 33, 78
SNDNETSPLF 31
SNDTCPSPLF 31, 162
STRPRTWTR 2, 23
STRRMTWTR 33, 42, 52, 67, 73
STRTCPFTP 76
WRKAFP 131
WRKWTR 42, 52, 60, 67, 73
ZTRNAFP 267
Computer Output Reduction
270 degree rotation 110
top margin on IPDS printers 117
Continuous Forms Printers
forms alignment 3
IBM 3835 189
IBM 3900 190
IBM 4224 196
IBM 4230 196
IBM 4234 197
IBM 6408 197
IBM 6412 197
COR
see computer output reduction
Core Interchange Fonts
managing with PSF/2 69
managing with PSF/6000 76
managing with VM and MVS 62
CPA3387 22
CPA338A 10, 17, 22
CPA403D 23
CPI331C 45
CPI400C 6, 12, 18
creating a data area 111
creating network controller and device descriptions 6, 12, 18
creating printer device descriptions 7, 13, 19
creating workstation customization objects 145
CRTPRTF 99

D

Data Description Specification keywords
CDEFNT 204
changes to keywords in V3R1 101
DBCS keywords 235
DRAWER changes 102
enhancements in V3R1 99
FNTCHRSET 204
GDF changes 102
IGCCDEFNT 204
keywords used with AFPDS files 179
OVERLAY 201
OVERLAY changes 101
PAGSEG 202
PAGSEG changes 102
Dave, Amit
see Bhajiwala
DBCS control characters for SCS 210
DDS keywords
see Data Description Specification keywords
Decompression Performance Enhancement feature 193
deferred status 96
disabling printer resident fonts 105, 109
displaying AFPDS spooled files 104
Double-Byte Printing
AFP printing 228
ASCII printers 220
attributes 231
basic characters 211, 219
CCSIDs 220
code pages 220
code points 219
DDS keywords 235
differences from single-byte 207
enabling on the AS/400 210
entering characters via the keyboard 209
environments 208
extended characters 211, 219
Font Management Aid 220
font tables 215
host print transform 227
IBM 3820 186
IBM 3825 188
IBM 3827 188
IBM 3828 189
IBM 3829 189
IBM 3835 189
IBM 3900 190
IBM 3930 187
last code point 211
licensed programs 237
network printing 227
PC attached printers 219
printer attachment 217
printer file parameters 233
printing process 212
special considerations 238

Double-Byte Printing *(continued)*
the basic concepts 207
twinax attached printers 217
user-defined characters 211
Duplex Printing
IBM 3816 185
IBM 3820 186
IBM 3825 188
IBM 3827 188
IBM 3828 189
IBM 3829 189
IBM 3900 192
IBM 3912 184
IBM 3916 186
IBM 3930 187
IBM 3935 187

E

enabling DBCS on the AS/400 210

F

features of IPDS impact printers 198
features of IPDS laser printers 192
floating graphics 102
floating overlays 101
floating page segments 102
Font Management Aid for DBCS 238
Font Management Aid for DBCS printing 220
font substitution 107
Fonts
character sets 203
code pages 203
coded fonts 203
Core Interchange fonts 203
CRTFNTRSC command 200
DBCS code pages 220
DBCS font tables 215
disabling printer resident fonts 105, 109
downloading DBCS fonts 228
enhancements on IBM 3912, 3916, 4028 130
font objects 203
managing on PSF/2 69
managing on PSF/6000 76
managing on VM and MVS 62
metric-only 107
overview 203
substitution 107
substitution with OfficeVision/400 108
Form Definitions
CRTFORMDF command 199
overview 200
using with Advanced Function Printing Utilities/400 Version 3 (5763-AF1) 200
form feed 9, 15, 20
forms type parameter of CRTOUTQ 91
FRONTOVL parameter 201

H

hardware n-up 99
Hewlett-Packard JetDirect 24
Host Print Transform 137, 227
customizing 145
customizing fonts 168
customizing the top margin 170
DBCS 227
enhancements with V3R1 139
example of the transform table 149
explaining the tags in the transform table 155
hints and tips for customizing 168
IOCA image support 139
new supported printers 140
output tray selection 139
overview 137
overview of PCL5 171
setting the bottom margin 140
setting the top margin 140
supported printers 141
using SEU to edit the transform tables 147

I

IBM 3812 184
IBM 3816 185
IBM 3820 186
IBM 3825 188
IBM 3827 188
IBM 3828 189
IBM 3829 189
IBM 3835 189
IBM 3900 190
IBM 3912 184
IBM 3916 186
IBM 3930 187
IBM 3935 187
IBM 4028 183
IBM 4033 10
IBM 4224 196
IBM 4230 196
IBM 4234 197
IBM 6408 197
IBM 6412 197
Impact Printers
features of IPDS impact printers 198
IBM 4224 196
IBM 4230 196
IBM 4234 197
IBM 6408 197
IBM 6412 197
INA
see Integrated Network Option
inactivity timer 9, 10, 16, 17, 21, 22
INO 17
see Integrated Network Option
Integrated Network Option 17

Internal Network Adapter
see Integrated Network Option
IOCA image support with host print transform 139
IPDS printers 183

L

LANRES/400 Functions
Host-to-LAN
LAN-to-Host
limiting the size of spooled files 94
Line Printer Requester 35
locking ASCII printers 3
LPR 162

M

managing print 176
MarkNet XLe 11, 16
compatibility mode 13
SF21224 11
Messages
AFP12A0 262
CPA3387 22
CPA338A 10, 17, 22
CPA403D 23
CPI331C 45
CPI400C 6, 12, 18
PQT2066 106
Mixed Object Document Content Architecture - Presentation 175
MODCA-P
see Mixed Object Document Content Architecture - Presentation
modifying NJE headers 80
multiple input drawer support 100, 102
multiple writers 89
multiup 99, 101

N

Network printing
see remote printing
NJE exit point 79
NJE headers and trailers 77

O

OfficeVision/400
using overlays with OfficeVision/400 201
Overlays
CRTOVL command 199
first/following support 103
floating overlays 101
front and back margins 115
overview 201
overriding deferred status 96
overview of PCL5 language commands 171
OVRPRTF 99

P

Page Definitions
CRTPAGDFN command 200
overview 202
Page Segments
CRTPAGSEG command 199
floating page segments 102
overview 202
PCL5 language commands 171
Positioning data
270 degree rotation 110
examples for IBM 3912, 3916 122
front and back margins 115
logical page origin on IBM 3835-002 114
logical page origin on IBM 3912, 3916, 4028 112
page rotation 90 degrees 113
positioning data on IBM 3912, 3916 118
positioning overlays 115
top margin with *COR on IPDS printers 117
using data areas 111
presenting printed information 176
print queue name 26
Print Services Facility/400
background 175
DDS keywords 179
distributed printing via PSF/2 180
optional features 181
overview 176
printers which require PSF/400 178
when you should use AFP 178
Printer File
BACKOVL parameter 201
changing a printer file 201
creating a printer file 201
DBCS parameters 233
DRAWER parameter 100
enhancements in V3R1 99
FRONTOVL parameter 201
MULTIUP parameter 101
OUTBIN parameter 99
overriding a printer file 201
overview 99
REDUCE parameter 99
Printer pass-through
see remote printing
printer pass-through example 44
printer timeout parameters 22
printing subsystems in OS/400 175
PSF/400
see Print Services Facility/400

Q

QIBM_QGW_NJEOUTBOUND 82
QNETSPLF user ID 38, 49, 58

QUSRSYS 34
QWPZTAFP API 265

R

registering and exit program 82
Remote System Printing
  benefits 31
  DBCS network printing 227
  destination types 35
  new and changed commands 33
  sample network 32
  sending AFP resources 69
  sending AFP resources from AS/400 to MVS and VM 62
  sending AFP resources to PSF/2 69
  sending AFP resources to PSF/6000 75
  sending spooled files to other systems 31
  SNADS directory entries V3 to V2 49
  SNADS directory entries V3 to V3 38
  Spooling to a PSF/2 system
    CRTOUTQ command and parameters 65
    destination type *PSF2 36
    starting a remote writer 67
    valid configurations 65
  Spooling to a PSF/6000 system
    CRTOUTQ command and parameters 71
    destination type *OTHER 36
    managing fonts 76
    sending AFP resources 75
    starting a remote writer 73
    valid configurations 70
  Spooling to a VM or MVS system
    confirmation messages 63
    CRTOUTQ command and parameters 58
    destination type *S390 36
    managing fonts 62
    NJE headers 79
    QNETSPLF user ID 58
    sending AFP resources 62
    SNADS directory entries 58
    specifying a SYSOUT class 59
    specifying an FCB 59
    starting a remote writer 60
    valid configurations 57
  Spooling to another OS/400 V2 system
    CRTOUTQ command and parameters 50
    destination type *OS400V2 35
    valid configurations 48
  Spooling to another OS/400 V3 system
    confirmation messages 46, 56
    CRTOUTQ command and parameters 39
    destination type *OS400 35
    printer pass-through example 44
    QNETSPLF user ID 38, 49
    SNADS directory entries 38, 49
    spooled file attributes 37
    valid configurations 37
  supported protocols 34
Remote System Printing *(continued)*
  writer type *RMT 42, 52
restricting the size of spooled files 94

S

SAPs 5, 11
SENDF.BAT 246
sending spooled files to a VM or MVS system 36, 57
sending spooled files to another AS/400 48
sending spooled files to another AS/400 system 36
sending spooled files to other systems 31
sending spooled files to PSF/2 36, 64
sending spooled files to PSF/6000 70
sending spooled files using SNADS 31
sending spooled files using TCP/IP 31
SNA distribution services 79
SNDTCPSPLF 162
software multiup 99
source service access points 5, 11, 17
Spooled Files
  displaying AFPDS spooled files 104
  sending to a VM or MVS system 36
  sending to another AS/400 35
  sending to other systems 31
  sending to PSF/2 36
ssap
  see source service access point
start printer writer command 2
starting a remote writer 42, 52, 67, 73
starting printer writers 23
substitution with OfficeVision/400 108

T

TCP/IP
  print queue name 26
transform AFP to ASCII 265

U

unattended printing 90
user exit program 78
user exit program example 83
user-defined text 77
using a SYSOUT class to spool to VM or MVS 59
using an FCB to spool to VM or MVS 59
using data areas 131

V

V3R1 AS/400 to V2 AS/400 48
V3R1 AS/400 to V3R1 AS/400 36
viewing AFP spooled files 271
VM/MVS Bridge 77

W

Workstation Customization Object
customizing 145
customizing fonts 168
customizing hints and tips 168
customizing the top margin 170
example of the transform table 149
explaining the tags in the transform table 155
overview of PCL5 171
supported printers 141
using SEU to edit the transform tables 147
writer types *PRT and *RMT 42, 52
WRKWTR 42, 52, 60, 67, 73
managing fonts on PSF/2
managing fonts 69
WSCST
see workstation customization object

ITSO Technical Bulletin Evaluation RED000

International Technical Support Organization
IBM AS/400 Printing IV
January 1995

Publication No. GG24-4389-00

Your feedback is very important to help us maintain the quality of ITSO Bulletins. **Please fill out this questionnaire and return it using one of the following methods:**

- Mail it to the address on the back (postage paid in U.S. only)
- Give it to an IBM marketing representative for mailing
- Fax it to: Your International Access Code + 1 914 432 8246
- Send a note to REDBOOK@VNET.IBM.COM

Please rate on a scale of 1 to 5 the subjects below.
(1 = very good, 2 = good, 3 = average, 4 = poor, 5 = very poor)

Overall Satisfaction ____

Organization of the book	____	Grammar/punctuation/spelling	____
Accuracy of the information	____	Ease of reading and understanding	____
Relevance of the information	____	Ease of finding information	____
Completeness of the information	____	Level of technical detail	____
Value of illustrations	____	Print quality	____

Please answer the following questions:

a) If you are an employee of IBM or its subsidiaries:

Do you provide billable services for 20% or more of your time? Yes____ No____

Are you in a Services Organization? Yes____ No____

b) Are you working in the USA? Yes____ No____

c) Was the Bulletin published in time for your needs? Yes____ No____

d) Did this Bulletin meet your needs? Yes____ No____

If no, please explain:

_____

_____

What other topics would you like to see in this Bulletin?

_____

_____

What other Technical Bulletins would you like to see published?

_____

Comments/Suggestions: **(THANK YOU FOR YOUR FEEDBACK!)**

Name	Address
Company or Organization	
Phone No.	

ITSO Technical Bulletin Evaluation **RED000**
GG24-4389-00

Cut or Fold
Along Line

Fold and Tape **Please do not staple** Fold and Tape

NO POSTAGE
NECESSARY
IF MAILED IN THE
UNITED STATES

BUSINESS REPLY MAIL

FIRST-CLASS MAIL PERMIT NO. 40 ARMONK, NEW YORK

POSTAGE WILL BE PAID BY ADDRESSEE

IBM International Technical Support Organization
Department 977
3605 HIGHWAY 52 NORTH
ROCHESTER MN
USA 55901-7829

Fold and Tape **Please do not staple** Fold and Tape

Cut or Fold
Along Line

Printed in U.S.A.

GG24-4389-00